AERO Design Ltd.
2013 - 39th Avenue N.E.
Calgary, Alberta, T2E 6R7
Phone: (403) 250-8027
Fax: (403) 250-8333

Purchase Order

P.O. Number	**11024**
Date	15-Feb-11

Vendor:	
Name:	Metal Alloy Fabrication Ltd.
Address:	6060 - 86th Avenue SE Calgary, AB T2C 4L7
Phone:	403-279-8958
Fax:	406-279-3253
Attention:	Misty Tracy
Currency:	CAD

Ship To:	
Name:	AERO Design Ltd.
Address:	2013 - 39th Avenue N.E. Calgary, Alberta, T2E 6R7
Phone:	(403) 250-8027
Fax:	(403) 250-8333
Attention:	

ITEM	DESCRIPTION	QTY	RATE	AMOUNT
1	Shear - Tread Plate 5.875 x 96 C-102 3003 Aluminum, 0.063 thick Material Supplied by Aero Design	16	7.76	124.16
		Subtotal		124.16
	Sales Tax	GST	5.00%	6.21
		Total	**CAD**	**$130.37**

SALES ORDER ACKNOWLEDGEMENT

FOR

Aero Design Ltd.
2013 39 Avenue N.E.
Calgary AB T2E 6R7

Metal Alloy Fabrication Limited

6060 - 86th Avenue S.E. Calgary, AB , T2C 4L7
Tel: (403)279-8958 Fax: (403)279-3253
E mail : info@metalalloy.com

From the desk of: MISTY TRACY

ATTENTION: JEFF **TEL: 403.250.8027** **FAX: 403.250.8333**

Sales Order	Ship Num	Cust No	Order Date	Tax	Promised	Salesman	Customer P. O. Number	Mark Shipment
0043293		ADL001	02/15/11	T	02/18/11	MISTY TRACY	RFQ NUMBER	FEB 18TH 2011

F.O.B.	Ship Date	Shipped Via	Terms	Waybill Number	Ins
MAF DOCK	//	CUSTOMER PICK UP	Net 30 Day		N

Item	T	QUANTITY Order	B/O	Ship	Unit	Part Number	Description	Unit Price Can$
001	S	16.00			EA	ADL:STRP-5.75X96	STRIP-5.75" X 96" .063 ALUM CP	7.76
							TO SHEAR MATERIAL AS PER YOUR DESCRIPTION 5.75" X 96" FROM CUSTOMER'S SUPPLIED .063 ALUMINUM CHECKER PLATE.	
							NOTE: 2-96"X48" WILL YEILD 16 PC'S. PROMISED: 2/18/11	
							Order SubTotal	124.16
							GOODS AND SERVICE TA .05000	6.21
							Tax SubTotal	6.21
							Total Order Amount	130.37

P.O. #	INITIALS	SUPPLIER	DESCRIPTION	Date	Job
11001		Accurate Screen	Stainless mesh		
11002		EB Peerless	Grip Tape		
11003		Instabox	Basket Boxes		
11004		Shippers Supply	Boxes		
11005		Top Gun	Cabin Step		
11006		API	Hardware		
11007		Voss Industries	T-Bolts		
11008		Thomas Skinner	Centre Drills		
11009		Thomas Skinner	Stylus Tip		
11010		McGregor Thompson	Door Mutes		
11011		Ryerson	1x1/8 SS Bar, 2x Tread Plate		
11012		Avio Diepen	Ancra Fittings		
11013		Thyssen Krupp	4x1 Al		
11014		GKN Bandy	Hinge		
11015		Air Liquide	0.045" 308L Rod		
11016		Top Gun	2 x 407 ski basket, 9x LH AS350 beam		
11017		Top Gun	AS350 long + Beams - Custom		
11018		Cancelled			
11019		Aircraft Spruce	1x1.75x0.065 4130 tube		
11020		Avio Diepen	Ancra Fittings - Arkex		
11021		API	AN3-5A bolts		
11022		Thyssen Krupp	1x4, 1x6 AL		
11023		Top Gun	Burn 2x lid		
11024		MAF	Shear Tread Plate		
11025		Aviall	Primer		
11026		Acklands	1/4-28 locking helicoils		
11027		Lab Machineworks	Cones		
11028		API	Hardware		
11029		Top Gun	Burn 2x lid		
11030		Metal Supermarket	5/16 Brass Rod		

P.O. #	INITIALS	SUPPLIER	DESCRIPTION	Date	Job
11031		API	#10 mininuts		
11032		Accurate Screen	Stainless mesh		
11033		~~Top Gun~~ Metal supermarket	~~2 basket, 4 lids~~ ø 5/8 SS. Rod		
11034		API	Hardware		
11035		EMJ	1/2 + 3/4 x 0.035 4130		
11036		ACT	Tooling		
11037		AB Base Anodizing	206L Aft Ftgs x35		
11038		Thyssen Krupp	1+1/2x6, 5x3/4, 1/2x3/4, 3x3 AL		
11039		Thomas Skinner	Refractometer / centre drills		
11040		Unified Alloys	3/8 x 0.065 SS tube		
11041		Loyalty Spring	Springs		
11042		Top Gun	Baskets		
11043		Top Gun	Beams		
11044		API	Hardware		
11045		Leavens	Screws		
11046		Top Gun	1 basket		
11047		Thyssen Krupp	3x1, 3.5x1 AL		
11048		~~Cancelled~~ AIR LIQUIDE	ER70S-6 WIRE 0.023		
11049		EMJ	1/2+3/4x0.035, 1x0.065 4130		
11050		Top Gun	2x AS350 Med Basket		
11051		MAF	Laser Tube Caps		
11052		API	Hardware		
11053		Ryerson	1x2x0.065 SS		
11054		Instabox	Large Basket Boxes		
11055		MAF	Checker Plate + Shear		
11056		Top Gun			
11057		Unified Alloys	1.0x0.065, 7/16 x 0.065		
11058		Instabox	Step Boxes		
11059		Top Gun			
11060		Avio Diepen	Ancra Fittings - Arkex		

P.O. #	INITIALS	SUPPLIER	DESCRIPTION	Date	Job
11061		BE Aerospace	CR3523-5-2 Rivet		
11062		Bolt Supply	#10-32 x3, x2.5 SS Screws		
11063		Acklands	5/16-24 Helicoils		
11064		Thyssen Krupp	3/4 Dia SS Rod		
11065		Agility	Ship basket to wisk air		
11066		Triad Fastners	#10-32 x 3 SS Screws		
11067		Triad Fastners	Fender Washers		
11068		Top Gun	2x basket		
11069		Metal Supermarket	1/4x10 plate		
11070		Lab Machineworks	Pins/knobs		
11071		Thomas Skinner	Coolant, taps		
11072		Top Gun	1xAS350 Med, 1xR44 SS, 6x Step		
11073		API	Hardware		
11074		Laird Plastics	3/4" Delrin		
11075		AB Base Anodizing	Anodize step parts, pins, knobs		
11076		Thyssen Krupp	0.050 6061-T6 Sheet		
11077		API	Hardware		
11078		Victoria British	Lid Props		
11079		Unified Alloys	3/4 x 0.065, 5/8 x 0.120 SS Tube		
11080		Top Gun	burn 1x basket		
11081		Top Gun	1x407, 2xAS350 Med, 10xbeams		
11082		Ryerson	1x2x0.125 SS Tube		
11083		Metal Supermarket	3.5 Dia Round 6061-T6		
11084		Trasmission Supply	O Rings		
11085		MAF	Laser Step Parts		
11086		Thyssen Krupp	2x4 6061-T6		
11087		AB Base Anodizing	LIDAR Camera Mount		
11088		API	Hardware		
11089		Interfast	Eyebolts		
11090		B/E Aerospace	Eyebolts, rivets		

P.O. #	INITIALS	SUPPLIER	DESCRIPTION	Date	Job
11091		EB Peerless	Grip Tape		
11092		EMJ	3/4 4130 Tube		
11093		Ryerson	5/16 Dia SS		
11094		Top Gun	R44 Beams		
11095		Top Gun			
11096		Kenn Borek	Cables		
11097		MAF	Laser Straps		
11098		Bolt Supply	#10-32 SS C'sunk screws, 2.5 + 3.0		
11099		API	Hardware		
11100		MAF	Ted - Heater Mount		
11101		Future Metals	1/2 + 3/4 x 0.035 SS Tube		
11102		Thyssen Krupp	0.050 6061-T6 Sheet		
11103		Aviall	WingWalk, Primer		
11104		Top Gun	407 Basket/Lid		
11105		Triad Fastners	3/16 Roll Pins, 3/8 SS Bolts		
11106		Top Gun			
11107		EMJ	1/2 4130 Tube		
11108		Metal Supermarket	1/4 Brass Rod		
11109		LS Technologies	Gas Spring		
11110		Morton Machine	Clamp Handles		
11111		API	Hinge		
11112		Top Gun	7 Baskets		
11113		Aircraft Spruce	Eye Bolts		
11114		API	Hardware		
11115		Top Gun	3 baskets/lids, 9 beams, burn 1 basket		
11116		API	Hardware		
11117		EMJ	1/2 + 3/4 4130 Tube		
11118		Top Gun			
11119		Ralphs Arctic Cat	Latch Cords/Cups		
11120		Top Gun	AS350 Step		

P.O. #	INITIALS	SUPPLIER	DESCRIPTION	Date	Job
11121		Avio Diepen	Ancra Studs		
11122		Air Liquide	0.045 ER70S-2 Rod		
11123		Top Gun			
11124		Instabox	Supersize Boxes		
11125		Thyssen Krupp	1x1,1.5,2.5,4, 3x8 6061-T6		
11126		API	CR3213-4-02 Rivets		
11127		Top Gun	2x Supersize AS350 Baskets		
11128		Ryerson	1x2x0.065 SS		
11129		Ryerson	1x2x0.120 SS		
11130		Air Liquide	SS MIG Wire		
11131		API	Hardware		
11132		Top Gun	30x Steps		
11133		Top Gun	407/R44/AS350 Beams		
11134		Instabox	Boxes - Med/Large		
11135		Thomas Skinner	Tooling		
11136		Top Gun	AS350 AFT BEAMS		
11137					
11138					
11139					
11140					
11141					
11142					
11143					
11144					
11145					
11146					
11147					
11148					
11149					
11150					

P.O. #	INITIALS	SUPPLIER	DESCRIPTION	Date	Job
11001	BJC	Accurate Screen	Stainless Mesh	05 JAN	
11002	BJC	EB PEERLESS	GRIP TAPE	06 JAN	
11003	BJC	Instabox	Basket Boxes (30)	06 JAN	
11004	BJC	Shippers Supply	Boxes	06 JAN	
11005	AC	TOP GUN	Cockpit Step	06 JAN	
11006	BJC	API	Hardware	06 JAN	
11007	~~MAF~~ BJC	~~Voss Ind~~	T-Bolts	18 JAN	
11008	BJC	Thomas Skinner	Centre Drills	19 JAN	
11009	BJC	Thomas Skinner	Stylus Tip	18 JAN	
11010	BJC	McGregor Thompson	Door Motor	18 JAN	
11011	BJC	Ryerson	1x1/8 SS Bar 2x Tread Plate	20 JAN	
11012	BJC	Avio Dieppe	Anera Studs	20 JAN	
11013	BJC	Thyssen Krupp	4x1 Al Bar	24 JAN	
11014	BJC	GKN BANDY	HINGE	25 JAN	
11015	BJC	AIR LIQUIDE	30SL ø0.045" Rod	31 JAN	
11016	AC	TOP GUN	2x 407 Ski basket / 9x Beams Lit	01 Feb	
11017	AC	TOP GUN	AS350 long / beams → Custom	01 Feb	
11018	BJC	~~Metal Supermkt~~			
11019	RR	Aircraft Service	1"x1 3/4"x0.065 4130	03 Feb	
11020	STF	~~AVIALL~~ ~~AVIO DIEPPE~~	AVIO DIEPPE SEAT FITTINGS - ARKEX	07 FEB	795
11021	BJC	~~Door~~ API	AN3-5A Bolts	11 Feb	
11022	BJC	Thyssenkrupp	1x4 / 1x6 AL	15 Feb	
11023	AC	Top Gun	Burn 2 L/H Lids	15 Feb	
11024	BJC	MAF	Sheet Tread Plate	15 Feb	
11025	RR	Avail	Primer Kit	18 Feb.	
11026	BJC	Acklands	1/4-28 Helicoils	22 Feb	
11027	BJC	LAB MACHINE	CONES	25 Feb	
11028	RR	API		01 March	
11029	TED	TOP GUN	BURN 2x LID	28 Feb	
11030	TED	Metal Supermkt	ø5/16 Brass	23 Feb	

P.O. #	INITIALS	SUPPLIER	DESCRIPTION	Date	Job
11031	RR.	API	#10 Mini nuts.	Mar 3	
11032	~~BJC~~	Accurate Screen	Stainless Mesh	Mar 9	
11033	RR	Top Gun.	2 Basket 4 Lids.	Mar 10.	
11034	RR.	API	Basket H/W.	Mar 14	
11035	BJC	EMJ	1/2 / 3/4 x0.035 4130 tube	Mar 15	
11036	RR	ACT			
11037	BJC	Alberta Base Anod.	206L Aft Ftgs x35	Mar 30	
11038	BJC	Thyssen krupp	1x6 5x3/4 3x3 1/2x6 1/2x3/4 Al Bar	Mar 30	
11039	BJC	Thomas Skinner	Refractometer C/Drills	Apr. 1	
11040	BJC	Unified	3/8 x 0.065 Rnd SS.	Apr. 4	
11041	BJC	Loyalty Spring	Comp / torsion springs	Apr. 4	
11042	RR	TOPGUN.	Baskets + Lids.		
11043	RR	Top Gun	Beams.	April 13	
11044	BJC	API	Hardware	Apr. 18	795
11045	BJC	Learens	Screws	Apr 18	795
11046	RR	Top Gun	~~Beams~~. 1 Basket 1 Lid.		
11047	BJC	Thyssen krupp	3x1 35x1 6061-T6	Apr. 28	
11048	~~BJC~~	~~Thomas Skinner~~ AIR LIQUIDE	~~Scrapped~~ MIG WIRE ER70S-6	May 3	
11049	BJC	EMJ	1/2 + 3/4 x 0.035 1 x 0.065 4130 Tube	May 3	
11050	RR	Top Gun.	2 Baskets (AS350 med.) 2 Lids	May 4	
11051	BJC	MAF	Laser Tube Caps	May 4	
11052	RR.	API	H/W	May 5.	
11053	BJC	Ryerson	1x2 x 0.065 Stainless	May 9	
11054	BJC	Instabox	Large Basket Boxes	May 10	
11055	STF	MAF	CHECKER PLATE	MAY 17	
11056	RR	Top Gun		May 18	
11057	BJC	Unified Alloys	1x0.065 / 7/16 x 0.065	May 20	
11058	BJC	Instabox	Step boxes	May 20	
11059	RR	Topgun.		May 26	
11060	STF	AVIO DIEPEN	ANCRAFT FITTINGS	MAY 26	795

P.O. #	INITIALS	SUPPLIER	DESCRIPTION	Date	Job
11061	BJC	BE AERO	CR3523-5-2	27 MAY	
11062	BJC	~~Bolt Supply~~ Thyssen krupp	~~3/4 #10-32 Screws~~ AL BAR	28 May	
11063	STF	ACKLANDS	HELI COILS	27 MAY	795
11064	BJC	Thyssen Krupp	ϕ3/4 Stainless Rod	30 May	
11065	BJC	Agility	Shipping basket to Wiskatir	30 May	
11066	BJC	Triad	#10-32 x 3" Stainless screws	31 May	
11067	BJC	Triad	Fender Washers	26 Apr	
11068	RR	Top Gun.	2 Baskets + 2 Lids.	1 June.	
11069	STF	METAL SUPMKT.	6061-T6 1/4" PLATE	2 JUNE	934/795
11070	BJC	LAB MACHINE	PINS / KNOBS	03 JUNE	
11071	BJC	Thomas Skinner	Coolant / TAPS	08 JUNE	
11072	RR	Top Gun	1 AS350 med 6 steps 1 RA4 SS	08 June	
11073	STF	API	BOLTS	09 JUNE	
11074	RR	Laird Plastics	Delrin	Mar	842
11075	BJC	AB Base Analizing	Anodizing	17 JUNE	
11076	BJC	Thyssen krupp	0.050" 6061-T6 sheet 4x12	21 JUNE	
11077	BJC	API	Hardware	22 JUNE	
11078	STF	VICTORIA BRITISH	LID PROPS	23 JUNE	
11079	BJC	Unified Alloys	3/4 x 0.065 / 5/8 x 0.120 SS tube	23 June	
11080	RR	Top Gun.	Burn off 1 Basket.	24 Jun.	
11081	RR	Top Gun	1 407 Basket. 14 Beams. 2 AS350 Med + Lids	29 Jun.	
11082	BJC	Ryerson	1x2x1/8 SS. tube	30 June	
11083	STF	METAL SUPERMKT	6061 ROUND BAR 3.5"	30 JUNE	937
11084	STF	TRANS. SUPPLY	O-RINGS	30 JUNE	937
11085	BJC	MAF	LASER CUT STEP PARTS	05 JULY	
11086	BJC	Thyssen krupp	2x4 6061	07 JULY	
11087	STF	AB. BASE ANODIZING	CAMERA MOUNT	12 JULY	937
11088	RR	API		18 July	
11089	BJC	Enterfast	Eye bolts	18 July	
11090	BJC	BIE	Eye bolts / Rivets	18 July	

P.O. #	INITIALS	SUPPLIER	DESCRIPTION	Date	Job
11091	BJC	EB PEERLESS	GRIP TAPE	18 JUL	
11092	BJC	EMJ	3/4 4130 tube.	25 JUL	
11093	BJC	Ryerson	ϕ5/16 stainless	25 July	
11094	RR	TopGun	R44 Beams (1 set)	29 July	
11095	R.R.	TOP GUN		3 AUG	
11096	STF	BOREK	S.S CABLES	11 AUG	215
11097	BJC	MAF	Laser Straps	15 Aug	
11098	BJC	Bolt Supply	#10-32 C'SUNK Screws 2.5 + 3.0	11 Aug	
11099	BJC	API	Hardware	19 Aug	
11100	BJC	MAF	Ted - heater mount	19 Aug	
11101	BJC	Future Metals	1/2 + 3/4 x 0.035 304 SS.	19 Aug	
11102	BJC	Thyssen krupp	0.050 6061-T6 Sheet	22 Aug.	
11103	RR	Aviall	Wing walk / Primer	18 July	
11104	RR	Topgun	407 Basket + Lid.	Aug 24	
11105	BJC	TRIAD	ϕ3/16 Roll Pins, 3/8 SS Bolts	Aug 25	
11106		TOP GUN			
11107	BJC	EMJ	1/2 x 0.035 4130 SQR TUBE	SEPT 16	
11108	BJC	Metal Supermkt	ϕ1/4 Brass Rod	Sept 16	
11109	BJC	LS Technologies	Gas Spring	Sept 29	
11110	BJC	Morton Machine	Clamp handles	Oct 14	
11111	BJC	API	HINGE	Oct 14	
11112	RR	Top Gun.	7 Basket.	Oct 20	
11113	BJC	Aircraft Spruce.		Oct 20	
11114	BJC	API	Hardware	Nov 3	
11115	RR	TOP GUN	Powder Coat - 3 Baskets & Beams, 3 sides - Burn 1 Basket, Lid	Nov 8	
11116	BJC	Ralphs Arctic Cat	Latch Cords / Cups	Nov 10	
11117	BJC	EMJ	1/2 + 3/4 4130	Nov 10	
11118	RR	TOP GUN			
11119	BJC	API	Hardware		
11120	BJC	TOP GUN	AS350 STEP		

P.O. #	INITIALS	SUPPLIER	DESCRIPTION	Date	Job
11121	BJC	Avio Diepen	Ancra Studs	18 Nov	
11122	BJC	AIR LIQUIDE	0.045 ER70S-2 ROD	17 NOV	
11123	BJC	TOP GUN		18 Nov	
11124	BJC	Instrbox	Boxes	22 Nov	
11125	BJC	Thyssen Krupp	1x1 1x2.5 3x8 1x4.5 1x4 6061-T6	25 Nov	
11126	BJC	API	CR3213-4-02 RIVETS	02 DEC	
11127	STF	TOP GUN	TWO LONG BASKETS + LIDS	01 DEC	
11128	BJC	Ryerson	1x2x 0.065 tube (marked 11126)	01 DEC	
11129	BJC	Ryerson	1x2x 0.120 tube	05 DEC	
11130	BJC	AIR LIQUIDE	S.S. MIG WIRE	18 OCT	
11131	BJC	API	Hardware	05 DEC	
11132	RP	Top Gun	30 stups	14 Dec.	
11133	BJC	Top Gun	407/R44/AS350 FWD Beams	16 Dec	
11134	BJC	Instrbox	Boxes	20 Dec	
11135	BJC	Skinner	Tooling	21 DEC.	
11136	RR	TOP GUN		21 DEC	
11137					
11138					
11139					
11140					
11141					
11142					
11143					
11144					
11145					
11146					
11147					
11148					
11149					
11150					

AERO Design Ltd.
2013 - 39th Avenue N.E.
Calgary, Alberta, T2E 6R7
Phone: (403) 250-8027
Fax: (403) 250-8333

Purchase Order

P.O. Number	**11060**
Date	26-May-11

Vendor:	
Name:	Avio-Diepen
Address:	Suite 500, 561 Airport South Parkway Atlanta, GA 30349 USA
Phone:	(770) 996-6430
Fax:	(770) 996-8430
Attention:	Eric Jackson ← e-MAILED PDF
Currency:	USD

Ship To:	
Name:	AERO Design Ltd.
Address:	2013 - 39th Avenue N.E. Calgary, Alberta, T2E 6R7
Phone:	(403) 250-8027
Fax:	(403) 250-8333
Attention:	Steve Fahey

ITEM	DESCRIPTION	QTY	RATE	AMOUNT
1	40191-10 Base Fitting Stud	4		
2	40191-11 Base Fitting Stud	4		
3	40351-10 Base Fitting Stud	4		
	Please ship together (as one order)			
	Please ship via UPS (account # 1016Y4) Regular service			
	ERIC CALLED TO CONFIRM CREDIT CARD INFO PROVIDED WILL SHIP TOMORROW.			
		Subtotal		
		Total	**USD**	

AVIO-DIEPEN INC.
561 AIRPORT SOUTH PARKWAY,SUITE 500
ATLANTA, GEORGIA 30349
UNITED STATES
FAX : +1-770-996-8430
SITA: HAGME7X

ORDER CONFIRMATION

Number : 413308 Page 1 of 1
Date : 27 MAY 2011
Contact: Eric Jackson
Phone : +1-770-996-6430

-Ship to-
AERO DESIGN LTD
2013-39TH AVENUE NE
CALGARY ALBERTA T2E 6R7
CANADA

-Sold to-
AERO DESIGN LTD
2013-39TH AVENUE NE
CALGARY ALBERTA T2E 6R7
CANADA

-Marks-
AERO DESIGN LTD
2013-39TH AVENUE NE
CALGARY ALBERTA T2E 6R7
CANADA

Attn : Steve Fahey
Fax : +1-403 250 8333
Your Ref : 11060

Payment : VISA/MASTERCARD
Currency : U.S. DOLLAR

Transport: UPS GROUND TRACKING
Prices : EX WORKS ATLANTA
Delivery : EX WORKS ATLANTA

Condition: FACTORY NEW CERTIFIED

Certificates: C.O.C. (ISSUED BY AVIO-DIEPEN)
C.O.C. (ISSUED BY MANUFACTURER)

It.	Partno and description	Quantity	Unit	Unit price	Disc	ShipDate
001	40191-10 BASE FITTING YOUR ITEM: 1	4.0	EACH	40.49	0.0	27-MAY-2011
002	40191-11 BASE FITTING YOUR ITEM: 2	4.0	EACH	34.52	0.0	02-JUN-2011
003	40351-10 THREADED STUD YOUR ITEM: 3	4.0	EACH	24.99	0.0	27-MAY-2011

THANK YOU FOR YOUR ORDER
UPS GROUND ACCT #1016Y4
ELJ

Dear Sirs,

We thank you for the above mentioned order and confirm the above items in accordance with our Conditions of Sale.

The delivery conditions refer to the Incoterms 2000.

-Authentication-

T.Williams-Cointault

Eric Jackson

ANCRA INTERNATIONAL LLC
4880 West Rosecrans Avenue
Hawthorne, California 90250
Phone: (310) 973-5000 • FAX: (310) 973-1138

Shipping List Number 691956-6

Customer Order		Order Date	Page
30062399		06-11-10	1

Ship To: 100706
AVIO-DIEPEN INC.
561 Airport South Parkway
Suite#500
Atlanta, GA 30349

Bill To: 100706
AVIO-DIEPEN INC.
561 Airport South Parkway
Suite#500
Atlanta, GA 30349

Ship Via: FedEx Ground Contact : RAY HALL
Ship from: W ANCRA WEST HAWTHORNE Freight Terms : COL

Ord.Ent.By: gvillalobos

Ln No	Item Number	Description	Sell UM	Sell Qty ....Ship...	To Stk UM	Bin Loc	Stock Qty To Ship	Shipped Qty/UM
8	40191-10		EA	500	EA	B-45	8	8
	Facility W :FITTING BASE ATTACHMENT							
	Rev. Level: BC							
						STOCK	492	492

** Special Instructions **
****
******
FEDEX GRD ACCT# 148379939
*** CRITICAL- [AVIO DIEPEN PO# NUMBER MUST BE ON
FREIGHT COMPANY BILL OF LADING.//DO NOT INSURE**
****
****
**CRITICAL-[ALL HEAT LOT #S MUST ME ON C of C FOR
ALL
SEAT TRACK**
****
****
FAA FORM 8130-3 AIRWORTHINESS APPROVAL REQUIRED
FOR PN 45387-10, 40191-10, AND 40340-20

Allocated: 09-09-10
Printed: 09-09-10 08:53:33

THIS IS A TRUE COPY CERTIFIED BY: QC81

ORM CS-7 REV. N/C

ANCRA INTERNATIONAL LLC
4880 West Rosecrans Avenue
Hawthorne, California 90250
Phone: (310) 973-5000 • FAX: (310) 973-1138

Shipping List Number691956-6

Customer Order		Order Date	Page
30062399		06-11-10	2

Ship To: 100706
AVIO-DIEPEN INC.
561 Airport South Parkway
Suite#500
Atlanta, GA 30349

Bill To: 100706
AVIO-DIEPEN INC.
561 Airport South Parkway
Suite#500
Atlanta, GA 30349

Ship Via: FedEx Ground Contact : RAY HALL
Ship from: W ANCRA WEST HAWTHORNE Freight Terms : COL

Ord Ent By: gvillalobos

Ln No	Item Number	Description	Sell UM	Sell Qty ....Ship...	To Stk UM	Bin Loc	Stock Qty To Ship	Shipped Qty/UM

CERTIFICATE OF CONFORMANCE

WE HEREBY CERTIFY THAT THE ABOVE STATED PART NUMBERS REPRESENTED ARE NEW AND HAVE BEEN MANUFACTURED AND INSPECTED IN ACCORDANCE WITH OUR QUALITY ASSURANCE MANUAL, ALL RELEVANT DRAWINGS, SPECIFICATIONS, PURCHASE ORDER REQUIREMENTS, AND LEGIBLY MARKED IN ACCORDANCE WITH FAR 45.15, IF APPLICABLE.

AS SUCH, THESE PRODUCTS CONFORM TO CURRENT APPLICABLE AIRWORTHINESS REGULATIONS. ALL CHEMICAL, PHYSICAL OR FUNCTIONAL TEST REPORTS RELEVANT TO THE CERTIFICATION OF CONFORMANCE ARE ON FILE IN OUR QUALITY ASSURANCE OFFICE.

INSPECTOR Juan Laguna DATE 9/9/2010

Shortage Claim Policy

Ancra customer is responsible for inspecting incoming shipments. Ancra must be notified within fifteen(15) days of receipt of shipment if material is not as ordered, quantity is either surplus or short, or if any damage has occurred in shipment. No claims submitted to Ancra will be accepted after fifteen(15) days of receipt.

THIS IS A TRUE COPY CERTIFIED BY: QC51

Pay Terms NET 30

FORM CS-7 REV. N/C

1. Approving National Aviation Authority / Country	2.	3. Form Tracking Number:
FAA / United States	**AUTHORIZED RELEASE CERTIFICATE** *FAA Form 8130-3, AIRWORTHINESS APPROVAL TAG*	691956-6

4. Organization Name and Address: ANCRA INTERNATIONAL LLC
4880 WEST ROSECRANS AVENUE
HAWTHORNE CA 90250
PRODUCTION CERTIFICATE No. (721NM)

5. Work Order,Contract,or Invoice Number: 30062399

6. Item	7. Description	8. Part Number	9 Eligibility *	10. Quantity	11. Serial/Batch Number	12. Status/Work
1	FITTING ASSY.	40191-10	N/A	500	N/A	NEW

13. Remarks

Airworthiness Approval

This part is a subcomponent of an FAA approved assembly.

AVIO-DIEPEN INC.

THIS IS A TRUE COPY CERTIFIED BY: QC81

14. Certifies the items identified above were manufactured in conformity to :

[X] Approved design data and are in a condition for safe operation

[ ] Non-approved design data specified in block 13

19. [ ] 14 CFR 43.9 Return to Service [ ] Other regulation specified in Block 13

Certifies that unless specified in Block 13, the work identified in Block12 and described in Block13 was accomplished in accordance with Title 14 Code of Federal Regulations, part 43 and in respect to that work, the items are approved for return to service.

15. Authorized Signature: Juan Lagunas	16. Approval/ Authorization No: DMIR-660010-NM	20. Authorized Signature:	21. Approval/Certificate No:
17. Name (Typed or Printed): JUAN LAGUNAS	18. Date: SEP-09-2010	22. Name (Typed or Printed):	23. Date:

USER/INSTALLER RESPONSIBILITIES

It is important to understand that the existence of this document alone does not automatically constitute authority to install the part/component/assembly.

Where the user/installer perfoms work in accordance with the national regulations of an airworthiness authority different than the airworthiness authority of the country specified in Block 1, it is essential that the user/installer ensures that his/her airworthiness authority accepts parts/components/assemblies from the airworthiness authority of the country specified in Block1.

Statements in Blocks14 and 19 do not constitute installation certification. In all cases, aircraft maintenence records must contain an installation certification issued in accordance with the national regulations by the user/installer before the aircraft may be flown.

* Installer must cross check elgibility with applicable technical data.

ANCRA INTERNATIONAL LLC
4880 West Rosecrans Avenue
Hawthorne, California 90250
Phone: (310) 973-5000 • Fax: (310) 973-1138

Shipping List Number 703762-5

Customer Order		Order Date	Page
30067586		12-22-10	1

Ship To: 100706
AVIO-DIEPEN INC.
561 Airport South Parkway
Suite#500
Atlanta, GA 30349

Bill To: 100706
AVIO-DIEPEN INC.
561 Airport South Parkway
Suite#500
Atlanta, GA 30349

Ship Via: FED-EX FREIGHT Contact : RAY HALL
Ship from: W ANCRA WEST HAWTHORNE Freight Terms : COL
Und Ept By: DJohnson

Line No	Item Number	Description	Sell UM	Sell Qty To Ship	Sell UM	Bin Loc	Stock Qty To Ship	Shipped Qty/UM
4	40351-10		EA	500	EA	STOCK	500	500

Facility W :STUD ASSY PANEL
Rev. Level: F

** Special Instructions **
****
******
FEDEX LTL 1866 3934 585
****
****
AVIO-D PO# NUMBER MUST BE ON BILL OF LADING
==========DO NOT INSURE==========
==========

*** ALL SEAT TRACK PRODUCTS ***
PART MARK TRACK NUMBER WITH STAMP
<<<DO NOT USE EXTRUSION NUMBER>>>
(ALL) HEAT TREAT LOT #S MUST BE LISTED ON CofC
****
****
ANCRA QUALITY ISSUE 8130-3 WHEN AVAILABLE:
40041-26
45387-10
43995-23
40351-12
40000-11

Allocated: 02-23-11
Printed: 02-23-11 08:26:50

THIS IS A TRUE COPY CERTIFIED BY: QC8

FORM CS-7 REV. N/C

ANCRA INTERNATIONAL LLC
4880 West Rosecrans Avenue
Hawthorne, California 90250
Phone: (310) 973-5000 • FAX: (310) 973-1138

Shipping List Number703762-5

Customer Order		Order Date	Page
30067586		12-22-10	2

Ship To: 100706
AVIO-DIEPEN INC.
561 Airport South Parkway
Suite#500
Atlanta, GA 30349

Bill To: 100706
AVIO-DIEPEN INC.
561 Airport South Parkway
Suite#500
Atlanta, GA 30349

Ship Via: FED-EX FREIGHT Contact : RAY HALL
Ship from: W ANCRA WEST HAWTHORNE Freight Terms : COL
Document By: DJohnson

Line No	Item Number	Description	Sell UM	Sell Qty To Ship	Stk UM	Bin Loc	Stock Qty To Ship	Shipped Qty/UM

CERTIFICATE OF CONFORMANCE

WE HEREBY CERTIFY THAT THE ABOVE STATED PART NUMBERS REPRESENTED ARE NEW AND HAVE BEEN MANUFACTURED AND INSPECTED IN ACCORDANCE WITH OUR QUALITY ASSURANCE MANUAL, ALL RELEVANT DRAWINGS, SPECIFICATIONS, PURCHASE ORDER REQUIREMENTS, AND LEGIBLY MARKED IN ACCORDANCE WITH FAR 45.15, IF APPLICABLE.

AS SUCH, THESE PRODUCTS CONFORM TO CURRENT APPLICABLE AIRWORTHINESS REGULATIONS. ALL CHEMICAL, PHYSICAL OR FUNCTIONAL TEST REPORTS RELEVANT TO THE CERTIFICATION OF CONFORMANCE ARE ON FILE IN OUR QUALITY ASSURANCE OFFICE.

SAUL ZAZUETA

INSPECTOR_____ DATE 2/23/11

Shortage Claim Policy

Ancra customer is responsible for inspecting incoming shipments. Ancra must be notified within fifteen(15) days of receipt of shipment if material is not as ordered, quantity is either surplus or short, or if any damage has occurred in shipment. No claims submitted to Ancra will be accepted after fifteen(15) days of receipt.

THIS IS A TRUE COPY CERTIFIED BY: QC81

Pay Terms NET 30

RM CS-7 REV. N/C

AERO Design Ltd.
2013 - 39th Avenue N.E.
Calgary, Alberta, T2E 6R7
Phone: (403) 250-8027
Fax: (403) 250-8333

Purchase Order

P.O. Number	**11058**
Date	24-May-11

Vendor:	
Name:	Instabox Alberta Inc.
Address:	1139 - 40th Avenue N.E. Calgary, Alberta T2E 6M9
Phone:	0
Fax:	0
Attention:	0
Currency:	CAD

Ship To:	
Name:	AERO Design Ltd.
Address:	2013 - 39th Avenue N.E. Calgary, Alberta, T2E 6R7
Phone:	(403) 250-8027
Fax:	(403) 250-8333
Attention:	Jeff

ITEM	DESCRIPTION	QTY	RATE	AMOUNT
1	10 x 5.25 x 42 Box 32-ECT Kraft Plain Full Over Lap	20	11.33	226.60
2	10 x 5.25 x 60 Box 32-ECT Kraft Plain Full Over Lap	20	10.50	210.00
3	7 x 7 x 26 Box 32-ECT Kraft Plain Full Over Lap	20	8.70	174.00
		Subtotal		610.60
	Sales Tax	GST	5.00%	30.53
		Total	**CAD**	**$641.13**

5/24/11 *** BILL OF LADING *** Page 1
12:58:36

INSTABOX ALBERTA INC. - CLGY.
1139 40 AVE. N.E.
CALGARY,ALBERTA T2E 6M9

Order: 0181680 Ord Date: 5/24/11 Cust P/O#: 11058 Slspn: SC

Sold To: AER005 Contact: JEFF CLARKE
AERO DESIGN LTD

2013 39TH AVE NE
CALGARY, AB T2E 6R7
Phone: (403) 250-8027
Fax : (403) 250-8333

Ship To:
AERO DESIGN LTD

2013 39TH AVE NE
CALGARY, AB T2E 6R7
Phone: (403) 250-8027
Fax : (403) 250-8333

Req Date: 5/30/11 Ship Loc: 11 Via: OUR DELIVERY Frt: Prepaid

Item Code	Docket Description	U/M	Qty Ord	Qty Shp	Qty B/O
2143	10 X 5 1/4 X 42 32-ECT, KRAFT PLAIN FULL OVER LAP Docket: 0079593	EA	20.00	23	¢
2143	10 X 5 1/4 X 60 32-ECT, KRAFT PLAIN FULL OVER LAP Docket: 0079596	EA	20.00	22	¢
2143	7 X 7 X 26 32 - ECT, KRAFT PLAIN FULL OVER LAP Docket: 0079597	EA	20.00	26	¢

Received above In Good Condition, Print Name:_____

Signature:_____

Date: 5/31/11 Delivered by: RB # Of Pieces\Bundles_____

Picked By:_____ # Of Pallets 1

INVOICE:_____ 3 - Dockets

Instabox
MANUFACTURED IN VANCOUVER • EDMONTON • CALGARY • SASKATOON
Phone: 403-219-2350
Fax: 403-250-8075
Email: Sylvie@instabox.com
Website: instabox.com

Quotation

May 20, 2011

Attention: Jeff Clarke @ Aero Design ltd

Thank you for contacting me with your packaging needs.

DESCRIPTION	QUANTITY	PRICE	
1) 10 X 5 ¼ X 60	10	$16.55EA	
200# KRAFT SINGLE WALL	→ 20	$11.33EA	226.60
FULL OVER LAP	40	$8.85EA	
2) 10 X 5 ¼ X 42	10	$14.20EA	
200# KRAFT SINGLE WALL	→ 20	$10.50EA	210.00
FULL OVER LAP	40	$7.10EA	
3) 7 X 7 X 26	10	$14.02EA	
200# KRAFT SINGLE WALL	→ 20	$8.70EA	174.00
FULL OVER LAP	40	$6.45EA	
			610.60

GST Extra
Quotation valid For 30 Days
FOB Calgary
Total quantity manufactured may vary 10% over or under.

Thank you for the opportunity to quote. If you have any questions regarding this quotation or if you want to place the order please give me a call at (403) 219-2350 direct.

Regards,

11058

Sylvie Calixte

Company _____ Part # _____

Box Style _____ Size _____

Material _____ 1st colour _____

Plate # _____ 2nd colour _____

Special Instructions _____

Please add 2½" over hang

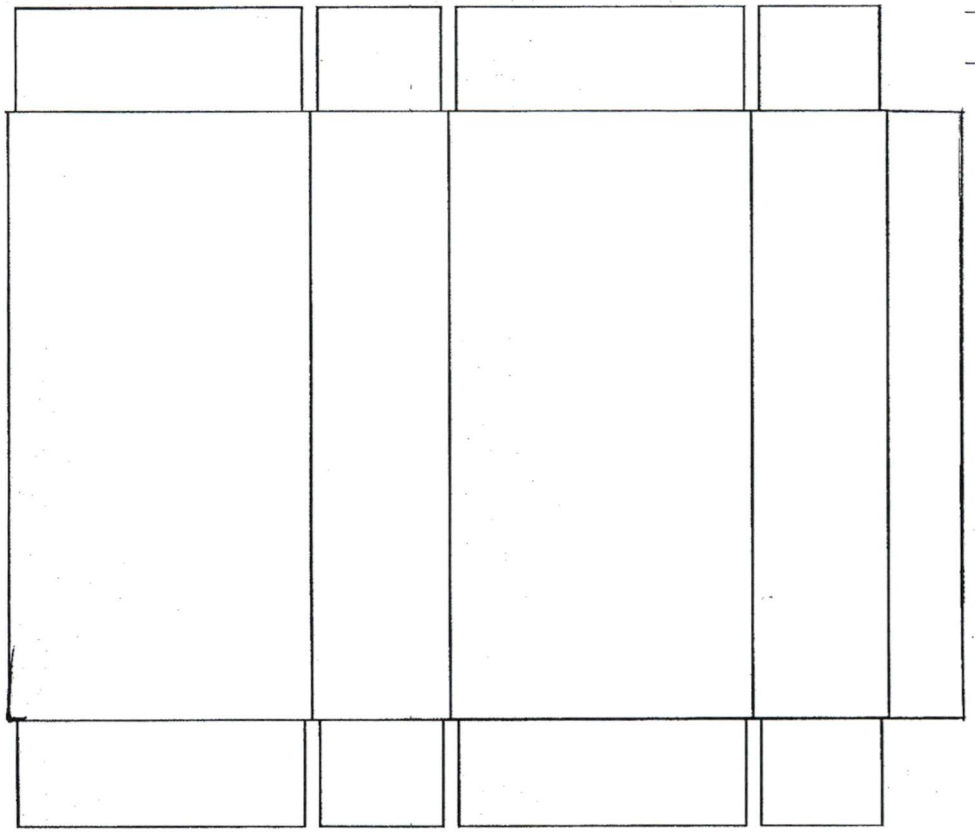

Instabox

FACTORIES IN CANADA - U.K. - U.S.A.

www.instabox.com

Prepared by: _____

Date: _____

AERO Design Ltd.
2013 - 39th Avenue N.E.
Calgary, Alberta, T2E 6R7
Phone: (403) 250-8027
Fax: (403) 250-8333

Purchase Order

P.O. Number	**11057**
Date	24-May-11

Vendor:	
Name:	Unified Alloys
Address:	Bay #1 7408 - 40 Street SE, Calgary AB T2C 2L6
Phone:	403-236-2216
Fax:	403-236-7458
Attention:	Sherri Liggins
Currency:	CAD

Ship To:	
Name:	AERO Design Ltd.
Address:	2013 - 39th Avenue N.E. Calgary, Alberta, T2E 6R7
Phone:	(403) 250-8027
Fax:	(403) 250-8333
Attention:	

ITEM	DESCRIPTION	QTY	RATE	AMOUNT
1	1.0 x 0.065 wall T304 180 Grit Round Tube	100	3.15	315.00
2	7/16" OD x 0.065 wall T304 seamless round tube	20	13.85	277.00
		Subtotal		592.00
	Sales Tax	GST	5.00%	29.60
		Total	**CAD**	**$621.60**

UNIFIEDALLOYS™
Bay #1 7408 - 40 Street S.E. Calgary AB Canada T2C 2L6
t. 403.236.2216 f. 403.236.7458 e. ab@unifiedalloys.com
www.unifiedalloys.com

SELLING WAREHOUSE	SHIPPING WAREHOUSE	PAGE	DATE		PACKING SLIP NUMBER
CALGARY	CALGARY	1	05/24/2011	8:18	CS-161226 / 001

SOLD TO
AERO DESIGN LTD.
2013 - 39 AVE N.E
CALGARY, AB
T2E 6R7

SHIP TO
AERO DESIGN LTD.
2013 - 39 AVE N.E
CALGARY, AB
T2E 6R7

CUSTOMER P.O. NUMBER	ORDERED BY		PROV. LIC. NO.	SALESMAN	TERMS
11057	JEFF			SHELDON BOLDUC	NET 30 DAYS

ORDER DATE	SHIP DATE	F.O.B.	SHIP VIA	PPD	COLL	CUSTOMER NUMBER
05/24/2011		PREPAID; PM DELIVERY	T & T COMPLETE	PREPAID		0000442 / 01

ITEM	PRODUCT CODE	DESCRIPTION	ORDERED	SHIPPED	BACK ORDER	UOM	HEAT/TRACE NUMBER
		WELDED STAINLESS ORNAMENTAL/STRUCTURAL TUBE					
1	1065304180	1"O.D. X .065"WALL T304 180 GRIT	100.00	100	∅	FT	
		SEAMLESS STAINLESS STEEL TUBING,COLD DRAWN TO ASTM A269/A213 AVG WALL, EDDY CURRENT OR HYDRO TESTED, RB80 MAX.					
2*	716065304	7/16" O.D. X .065 WALL T304/L SMLS 20 FOOT ****DELIVERY 1 WEEK****	20.00	20	∅	FT	672-3044

PACKING SLIP

TOTAL NET WEIGHT 70.1100

INTERTEK ISO 9001:2008

RECEIVED BY	SHIPPED BY	PACKAGE DESCRIPTIONS
	TRZS SC-AY 05/27/11	1 20' bundle (D) 1 20' tube (C)

REFER TO BACK OF PAGE FOR TERMS AND CONDITIONS OF SALE

A trademark of Unified Alloys Ltd. used by Unified Alloys (Calgary) Ltd.

P/S - CAL (03/11) G.S.T. REGISTRATION # 12166 9485 RT0001

CUSTOMER COPY

TERMS AND CONDITIONS OF SALE

1. The prices shown herein are based upon factory costs, exchange rates, duty and applicable taxes under Federal, Provincial or Municipal Law now prevailing. We, as Sellers, reserve the right to adjust this price or these prices should there be any change prior to shipment or customs clearance in such factory costs, exchange, duty or taxes.

2. We will not be liable for any claim as a result of any defect or insufficient quality in the goods delivered under this order, unless such claim is made in writing within ten (10) days after receipt of the goods and unless the goods or items concerned are returned prepaid to our Shipping Warehouse for examination, if we so request.

3. Our guarantee on products is limited to the guarantee extended to us by the original manufacturer. On any claims for repair and/or replacement under such guarantee, all cost incurred by us which are not underwritten by the original manufacturer, shall be for claimant's account.

   Claims under this guarantee shall be submitted promptly in writing to our head office and shall be recognized only if the goods or items concerned are returned prepaid to our Shipping Warehouse for examination, if we so request. Examination at any other place shall be made at the expense of the Claimant.

   WARNING

4. It is the Buyer's responsibility to ensure that the products ordered are suitable for their purposes, and to ensure that all personnel working with the products are aware of the specifications of the products. We will not be liable for any claim as a result of unsuitable products or lack of knowledge of the specifications.

   QUANTITIES

5. We reserve the right to ship ten (10) percent more or less than the quantity ordered, unless otherwise specified herein.

6. We shall not be liable for the loss, damage, detention or delay due to causes beyond our reasonable control arising in the manufacture, shipment or delivery of the goods, nor shall our liability under any of the provisions of these conditions extend to consequential damages of any kind, or to freight charges for the return of goods or items to our Shipping Warehouse for examination, if we so request.

   RETURNS

7. Credit for returned material will not be granted, unless such material has been returned with our prior written consent.

   CANCELLATIONS

8. Orders may not be cancelled or suspended, except with our prior written consent. Restocking charges may apply.

   DELIVERY DATES

9. Promises of delivery are estimated as carefully as possible and although we do our best to ship within the time mentioned, we cannot, nor will we guarantee to do so.

MILL INSPECTION CERTIFICATE
SHANGHAI PUFA STAINLESS STEEL PIPE FACTORY T-4150

7 Hongye Road, WangGang Town, Pudong New District, Shanghai, China

Certification No: TW12268.06

ISO 9001:2000 Certified by JAS-ANZ

CERTIFICATE NO.: 06-12-9
COMMODITY: Seamless Stainless Steel Tube OD Polished to 240Grit
SPECIFICATION: ASTM A269-04b, ASTM A213-04b, ASME SA213-04b (Average Wall)

PURCHASER: PAC TRADE, INC.
CONTRACT NO.: PAC P.O. No.:9289
DATE OF REPORT: 2006-12-11

Steel Grade	Heat No.	Lot No.	Dimensions			Quantity		Process	Delivery Condition	Macroscopic Inspection	
			O.D. (inch)	W.T. (inch)	Length (ft)	Pieces	Feet			End Cut	Appearance
TP304/ TP304L	672-3044	12-11	7/16	0.065	20	55	1, 100	Cold-Drawn	Solution -Annealed	Passed	Passed

Chemical Composition (W.T. %)

Element	C	Mn	P	S	Si	Cr	Ni	Mo	Ti	
Requirements	≤0.035	≤2.00	≤0.040	≤0.030	≤0.75	18.0~20.0	8.00~13.0	--	—	
Ladle Analysis	0.030	1.34	0.032	0.006	0.34	18.23	8.22	--		
Product Analysis	0.032	1.32	0.033	0.005	0.34	18.24	8.21	—	—	

Mechanical Properties

Test Item	Y.S. (KSI) $Rp_{0.2}$	T.S. (KSI) Rm	EL. (%) In 2 in	Reduction of Area Z (%)	Hardness	Cold Bend Test	Flaring Test	Flattening Test	Flange Test
Requirements	≥30	≥75	≥35	—	HRB≤80	—	25%	e=0.09	
Test Results	36/37	82/83	55/56	—	71/73	—	Passed	Passed	Passed

Non Destructive Tests			Hydrostatic Test	Inter-granular Corrosion Test
Test Item	Eddy Current Test	Ultrasonic Test		
Requirements	E 426	—	--	ASTM A262 Practice E
Test Results	Passed	—	—	Passed

Remarks:
- Tubes tested per ASTM A450-04
- Hardness tested per NACE MR-01-03
- All tubes annealed to above 1900 Deg F and water quenched below 800 Deg F in 3 minutes
- No weld repair performed
- Free from mercury contamination
- In compliance with EN 10204-3.1.B
- Tubes Made in CHINA

We hereby certify that the material described herein has been made and tested completely in accordance with the above specification and with the requirements of the purchase order or contract.

Prepared by: Shi Jian Fu

Approved by: Dai Yong Sheng

质量检验专用章

UNIFIEDALLOYS™
Bay #1 7408 - 40 Street S.E. Calgary AB Canada T2C 2L6
t. 403.236.2216 f. 403.236.7458 e. ab@unifiedalloys.com
www.unifiedalloys.com

CUSTOMER REFERENCE	PAGE	DATE	SALES QUOTATION
	1	5/20/2011	CQ-82038

QUOTATION TO

AERO DESIGN LTD.

2013 - 39 AVE N.E
CALGARY, AB
T2E 6R7

ATTN: JEFF

PH#: 250-8027
FAX: 1-403-250-8333

ITEM	PRODUCT CODE	DESCRIPTION	QUANTITY	UOM	UNIT PRICE	EXTENDED AMOUNT
		WELDED STAINLESS ORNAMENTAL/STRUCTURAL TUBE				
1	1065304180	1"O.D. X .065"WALL T304 180 GRIT	100.00	FT	3.15	$315.00
		SEAMLESS STAINLESS STEEL TUBING,COLD DRAWN TO ASTM A269/A213 AVG WALL, EDDY CURRENT OR HYDRO TESTED, RB80 MAX.				Same as last order
2	716065304	7/16" O.D. X .065 WALL T304/L SMLS 20 FOOT ****DELIVERY 1 WEEK****	20.00	FT	13.85	$277.00
		FOB: PREPAID; PM DELIVERY DEL: STOCK UNLESS NOTED PRICE VALID FOR 10 DAYS NET 30 DAYS AFTER INVOICE DATE RESTOCKING POLICY APPLIES GST/PST (TAXES) NOT INCLUDED			Check for 2 Lengths	
		BEST REGARDS, SHELDON BOLDUC				
		PO 11057				

TOTAL $592.00

A trademark of Unified Alloys Ltd. used by Unified Alloys (Calgary) a partnership under license.

AERO Design Ltd.
2013 - 39th Avenue N.E.
Calgary, Alberta, T2E 6R7
Phone: (403) 250-8027
Fax: (403) 250-8333

Purchase Order

P.O. Number	**11055**
Date	17-May-11

Vendor:	
Name:	Metal Alloy Fabrication Ltd.
Address:	6060 - 86th Avenue SE Calgary, AB T2C 4L7
Phone:	403-279-8958
Fax:	406-279-3253
Attention:	Misty Tracy
Currency:	CAD

Ship To:	
Name:	AERO Design Ltd.
Address:	2013 - 39th Avenue N.E. Calgary, Alberta, T2E 6R7
Phone:	(403) 250-8027
Fax:	(403) 250-8333
Attention:	

ITEM	DESCRIPTION	QTY	RATE	AMOUNT
1	Shear - Tread Plate 5.875 x 96 C-102 3003 Aluminum, 0.063 thick Material included	32	18.38	588.16
		Subtotal		588.16
	Sales Tax	GST	5.00%	29.41
		Total	**CAD**	**$617.57**

SALES ORDER ACKNOWLEDGEMENT

FOR

Aero Design Ltd.
2013 39 Avenue N.E.
Calgary AB T2E 6R7

Metal Alloy Fabrication Limited

6060 - 86th Avenue S.E. Calgary, AB , T2C 4L7
Tel: (403)279-8958 Fax: (403)279-3253
E mail : info@metalalloy.com

From the desk of: MISTY TRACY

ATTENTION: JEFF CLARKE **TEL: 403.250.8027** **FAX: 403.250.8333**

Sales Order	Ship Num	Cust No	Order Date	Tax	Promised	Salesman	Customer P. O. Number	Mark Shipment
0044106		ADL001	05/17/11	T	05/20/11	MISTY TRACY	11055	MAY 20TH 2011

F.O.B.	Ship Date	Shipped Via	Terms	Waybill Number	Ins
MAF DOCK	//	CUSTOMER PICK UP	Net 30 Day		N

Item	T	QUANTITY Order	B/O	Ship	Unit	Part Number	Description	Unit Price Can$
001	S	32.00			EA	ADL:STRP5.875X96	STRIP-5.875"X96" .063 ALM CP	18.38
							TO SUPPLY MATERIAL AND LASER CUT ONLY AS PER YOUR DESCRIPTION 5.875" X X96" FROM .063" ALUMINUM CHECKER PLATE (C102). PROMISED: 5/20/11	
							Order SubTotal	588.16
							GOODS AND SERVICE TA .05000	29.41
							Tax SubTotal	29.41
							Total Order Amount	617.57

SALES ORDER ACKNOWLEDGEMENT

FOR

Aero Design Ltd.
2013 39 Avenue N.E.
Calgary AB T2E 6R7

Metal Alloy Fabrication Limited

6060 - 86th Avenue S.E. Calgary, AB , T2C 4L7
Tel: (403)279-8956 Fax: (403)279-3253
E mail : info@metalalloy.com

From the desk of: MISTY TRACY

ATTENTION: JEFF CLARKE **TEL: 403.250.8027** **FAX: 403.250.8333**

Sales Order	Ship Num	Cust No	Order Date	Tax	Promised	Salesman	Customer P. O. Number	Mark Shipment
0044106		ADL001	05/17/11	T	05/20/11	MISTY TRACY	11055	MAY 20TH 2011

F.O.B.	Ship Date	Shipped Via	Terms	Waybill Number	Ins
MAF DOCK	//	CUSTOMER PICK UP	Net 30 Day		N

Item	T	QUANTITY Order	B/O	Ship	Unit	Part Number	Description	Unit Price Can$
001	S	32.00			EA	ADL:STRP5.875X96	STRIP-5.875"X96" .063 ALM CP	18.38
							TO SUPPLY MATERIAL AND LASER CUT ONLY AS PER YOUR DESCRIPTION 5.875" X X96" FROM .063" ALUMINUM CHECKER PLATE (C102). PROMISED: 5/20/11	
							Order SubTotal	588.16
							GOODS AND SERVICE TA .05000	29.41
							Tax SubTotal	29.41
							Total Order Amount	617.57

QUOTATION

FOR

Aero Design Ltd.
2013 39 Avenue N.E.
Calgary, AB T2E 6R7

FAXED 8:54

Metal Alloy Fabrication Limited

6060 - 86th Avenue S.E. Calgary, AB , T2C 4L7
Tel: (403)279-8958 Fax: (403)279-3253
E mail : info@metalalloy.com

From the Desk of : MISTY TRACY

ATT:N JEFF CLARKE **TEL: 403 . 250 . 8027** **FAX: 403 . 250 . 8333**

Quote No. & Date	Cust No	S/M	Your Reference	Delivery Promise	F.O.B.	Expiry
4032084 05/16/11	ADL001	MIT	RFQ NUMBER	3 - 5 DAYS	MAF DOCK	30 DAYS

Item	Quantity	UM	Part	Description	Price	Extension
001	32.00	EA	ADL:STRP5.875X96	STRIP-5.875"X96" .063 ALM CP TO SUPPLY MATERIAL AND LASER CUT ONLY AS PER YOUR DESCRIPTION 5.875" X X96" FROM .063" ALUMINUM CHECKER PLATE (C102).	18.38	588.16

QUOTED PRICES DO NOT INCLUDE ANY APPLICABLE FEDERAL AND /OR PROVINCIAL SALES TAX

Thank you for the opportunity to provide a quotation to supply your requirements. If you have any questions please do not hesitate to contact us at 279-8958.
MAF Terms and Conditions of Sale are available on our website metalalloy.com

TO ACCEPT THIS QUOTE AND MAF'S TERMS AND CONDITIONS OF SALE, PLEASE MARK THE ACCEPTABLE QUANTITIES AND COSTS, SIGN AND DATE A COPY OF THIS QUOTATION AND FAX IT TO (403) 279-3253 ATTN: MISTY TRACY A SIGNED COPY IS REQUIRED BEFORE WE CAN PROCESS YOUR ORDER,

Print Name: STEVEN Position Title: ENGINEER

Your P.O.# 11055 Signature: S Hartley Date: 17 MAY/2011

AERO Design Ltd.
2013 - 39th Avenue N.E.
Calgary, Alberta, T2E 6R7
Phone: (403) 250-8027
Fax: (403) 250-8333

Purchase Order

P.O. Number	**11053**
Date	09-May-11

Vendor:	
Name:	Ryerson Metals
Address:	7910 - 40th Street Calgary AB T2C 2Y3
Phone:	403-250-2866
Fax:	403-250-9884
Attention:	Travis Flood
Currency:	CAD

Ship To:	
Name:	AERO Design Ltd.
Address:	2013 - 39th Avenue N.E. Calgary, Alberta, T2E 6R7
Phone:	(403) 250-8027
Fax:	(403) 250-8333
Attention:	

ITEM	DESCRIPTION	QTY	RATE	AMOUNT
1	1 x 2 x 0.062 tube, 20' lengths 304 Rectangular, polished tube	10	4.25	0.00
		Subtotal		0.00
	Sales Tax	GST	5.00%	0.00
		Total	**CAD**	**$0.00**

RYERSON
Ryerson Canada, Inc.

Packing List
Shipping Order

MO #
7910 40TH STREET SE CALGARY AB T2C2Y3
7910 40TH STREET SE CALGARY AB T2C2Y3
Phone (403) 250-2866

Page 1 of 1 05/10/11 18:43 CST
SO AP

Order Number
95-372828
Purchase Order
11053

SOLD TO:
AERO DESIGN LTD (496011 AB LTD
2013 - 39TH AVE N.E.
CALGARY AB T2E 6R7

SHIP TO:
AERO DESIGN LTD (496011 AB LTD)
2013 - 39TH AVE N.E.
CALGARY AB T2E 6R7 Phone (403)250-8027

Total Packages: 1

Ship Via	Freight	Customer #	Sales	Tax Status	Contact	Certs	Due Date
INTEGRIS ROB LARDIE	Our Truck Prepaid/Allowe	300379	11 TF	Taxable			05/13/2011

Bill of Lading:	Pro Bill:	Ship Approval:	Ship Date:	Order Date:
				05/09/2011

Line No.	Item	Description	Qty Shipped	B/O Quantity
1	7213-3542	304 RECT POL TUBE 1.00 X2.0X.062X240		
		Tariff Code: 7306.61.90.21		
Qty Comm: 5		Order Qty: 100.0000 UFT Pcs: 5	100.00 UFT	
(1 -BUNDL 121)				
		Cntrl: 95DA3567 H: ATW050030 T: L172233 5 pcs Loc SCALE		
*** Filled by Initials: JR				
2	7915-9998	ENERGY CHARGE		
		Tariff Code: 7306.61.90.21		
		Order Qty: 1.0000 LOT Pcs: 0	1.00 LOT	

Customer/Driver Instructions:

Packing List

Received by: _____ Date: _____

Acceptance of goods constitutes acceptance of our Terms and Conditions, available on our website at www.ryerson.com (or from your sales representative, or by calling (800) 328-7800).

Alloys of Aluminum, Copper, Steel **Caution:**
Processing of this material may present a physical and or health hazard. See material safety data sheets for further information

MAY 16 2011.

RYERSON
Ryerson Canada, Inc.

Shipping Order / Bordereau d'expédition

MO #
200 RUE DU CHEMINOT VAUDREUIL-DORION QC J7V 5V5
200 RUE DU CHEMINOT VAUDREUIL QC J7V 5V5
Phone/Tel (450) 424-0153

Page 1 de 1 05/11/11 12:58 CST
RO AP
Remote Br/Succ vente a dist:95
R95-372829
Ship Br/Succ d'expedition:X6

S.O. / Bordereau d'expédition
95-372829
P.O. / Bon de commande
11053

Sold to/Facturer a:
AERO DESIGN LTD (496011 AB LTD
2013 - 39TH AVE N.E.
CALGARY AB T2E 6R7

Ship to/Expedier a:
AERO DESIGN LTD (496011 AB LTD)
2013 - 39TH AVE N.E.
CALGARY AB T2E 6R7 Phone/Tel (403)250-8027

MD28

Total Packages / Paquets totaux 1

Ship Via / Expedier par	Freight / Fret	Customer # / # Client	Sales / Ventes	Tax Status / Statut fisca	Contact / Personne ressource	Certs	Due Date / Date due
INTERCOMPANY	Our Truck Prepaid/Allowe	300379	11 TF	Imposbl			05/17/2011

Bill of Lading / N' du connaissement	Pro Bill / Bordereau d'envoi	Ship Approval / Approbation de l' expédition	Ship Date / Date d'expédition	Order Date / Date de commande
				05/09/2011

Line / # de ligne **Item** **Description** **Qty Shipped/Qté expédiée** **B.O.Qty/En souffrance**

1 7213-3542 304 RECT POL TUBE 1.00 X2.0X.062X240
Tariff Code / Code tarifaire: 7306.61.90.21
Qty Comm: 5 Order Qty/Qte commandee 100.0000 UFT Pcs: 5 100.00 UFT
(1 -BUNDL 121 20')
Cntrl: X6FD4105 C: AVB050589 T: 699745 5 pcs Loc EXP
ATTN: BILL IN CALGARY, PLEASE SHIP
TO CUSTOMER ON OUR TRUCK
*** Filled by Initials/Rempli par initiale: DL

Customer/Driver Instructions / Commentaires du client/chauffeur:

Packing List/Bordereau de marchandises

Received by/ Reçu Par: _____ Date: _____

Acceptance of goods constitutes acceptance of our Terms and Conditions, available on our website at www.Ryerson.com, or from your sales representative, or by calling (800) 268-2680.
L'acceptation des marchandises constitue un consentement a nos termes et conditions, qui sont disponibles sur notre site web www.ryerson.com, ou par votre representant interne, ou par telephone (800) 268-2680.

Alloys of Aluminum, Copper, Steel **Caution:**
Processing of this material may present a physical and or health hazard. See material safety data sheets for further information
Les alliages d'aluminum, de cuivre, d'acier **Avertissement:**
le Traitement de ce matériel peut présenter un risque physique et ou pour la santé. Pour de plus ample information voir les fiches.

AERO Design Ltd.
2013 - 39th Avenue N.E.
Calgary, Alberta, T2E 6R7
Phone: (403) 250-8027
Fax: (403) 250-8333

Purchase Order

P.O. Number	**11052**
Date	05-May-11

Vendor:	
Name:	API
Address:	Suite 5 575 Palmer Road N.E. Calgary, Alberta T2E 7G4
Phone:	403-250-9383
Fax:	403-250-8186
Attention:	0
Currency:	CAD

Ship To:	
Name:	AERO Design Ltd.
Address:	2013 - 39th Avenue N.E. Calgary, Alberta, T2E 6R7
Phone:	(403) 250-8027
Fax:	(403) 250-8333
Attention:	

ITEM	DESCRIPTION	QTY	RATE	AMOUNT
1	CR3213-4-2 (100 pack)	1000	0.68	680.00
2	AN4-14A Bolt (10 pack)	20	4.38	87.60
3	AN4-15A Bolt (4 pack)	25	2.12	53.00
4	AN3-11A Bolt (10 pack)	10	2.12	21.20
5	MS21042L4 Nut (50 pack)	2	22.55	45.10
6	AN970-3 (25 pack)	4	2.29	9.16
7	NAS1149F0332P Washer (100 pack)	4	2.41	9.64
		Subtotal		905.70
	Sales Tax	GST	5.00%	45.29
		Total	**CAD**	**$950.99**

API WANT LIST

Company: Aero Design Ltd.
Contact Name: Richard
Address: 2013-39 AVE NE.
Calgary, AB
Phone: 403-250-8027

Order Date: May 5, 2011
Date Needed: ASAP.
P.O. #: ~~H034~~ 11052.
Work Order #:
Ship Via:

ORDER UNTIL MIDNIGHT EST FOR SAME DAY SHIPPING • FAX ORDERS TO 800-950-1411

QUANTITY	PART NUMBER	DESCRIPTION
100	AN970-3	Flat washer.
400.	NAS1149F0332P	Flat washer.

Additional instructions

API
AEROSPACE PRODUCTS INTERNATIONAL

API Asia Pacific
Philippines
63.45.599.5490 Tel
63.45.599.5464 Fax
PhilSales@apiworldwide.com

API China
Shanghai (Pudong)
86.21.5866.8660 Tel
86.21.5866.8366 Fax
ChinaSales@apiworldwide.com

API Canada
Calgary
888.322.8281 Tel
888.322.8285 Fax
CalgarySales@apiworldwide.com

Montreal
800.214.7404 Tel
800.214.8875 Fax
MontrealSales@apiworldwide.com

API USA
Memphis
888.API.24X7 Tel
800.950.1411 Fax
24X7@apiworldwide.com

API WANT LIST

Company Aero Design Ltd.
Contact Name Richard.
Address 2013 - 39 AVE NE.
Calgary AB.
Phone 403-250-8027

Order Date May 5, 2011
Date Needed ASAP
P.O. # 11052.
Work Order #
Ship Via

ORDER UNTIL MIDNIGHT EST FOR SAME DAY SHIPPING • FAX ORDERS TO 800-950-1411

QUANTITY	PART NUMBER	DESCRIPTION
1000	CR3213-4-02	Blind Rivet.
200	~~AN~~ AN4-14A	Bolt.
100	AN4-15A	Bolt.
100	AN3-11A	Bolt.
100	MS21042L4	Mini Nut.

Additional instructions

API
AEROSPACE PRODUCTS INTERNATIONAL

API Asia Pacific
Philippines
63.45.599.5490 Tel
63.45.599.5464 Fax
PhilSales@apiworldwide.com

API China
Shanghai (Pudong)
86.21.5866.8660 Tel
86.21.5866.8366 Fax
ChinaSales@apiworldwide.com

API Canada
Calgary
888.322.8281 Tel
888.322.8285 Fax
CalgarySales@apiworldwide.com

Montreal
800.214.7404 Tel
800.214.8875 Fax
MontrealSales@apiworldwide.com

API USA
Memphis
888.API.24X7 Tel
800.950.1411 Fax
24X7@apiworldwide.com

API
AEROSPACE PRODUCTS INTERNATIONAL

API
#550 - 575 Palmer Road N.E.
CALGARY AB T2E 7G4
CANADA

05/09/2011 13:34:17

Pack List

Shipping Address
AERO DESIGN LTD
2013 39 AVE NE
CALGARY AB T2E 6R7
CANADA

Forwarding Agent's Address

Shipping Instructions
Detailed Shipping Instructions at the end of the document

Packing Instructions
Detailed Packing Instructions at the end of the document

Information

Document Number	80879643
Document Date	05/09/2011
Purchase Order No.	11052
Purchase Order Date	05/05/2011
Sales Order Number	781843
Sales Order Date	05/05/2011
Customer Number	5101060
Shipping Conditions	Will Call
Incoterms	
Cust Ship Acct	
Delivery Date	05/09/2011
Bill of Lading	
Total Weight	242.124 LB
Total Volume	37,996 IN3
Carrier	PICK UP BY CUSTOMER

Item	Material	Material Description	Quantity	Weight	Batch Num
10	CR3213-4-2	CHERRY RIVET (SELL ONLY IN BAGS OF 100)			
	Batches				
	0001727856 (PO:4500147282)		800 EA	192 LB	
	0001732588 (PO:4500147282)		200 EA	48 LB	
20	AN4-14A	BOLT (PKG 10)			
	Batches				
	0001712845 (PO:4500147282)		6 PAC	0 LB	
	0001727835 (PO:4500147282)		10 PAC	0 LB	
	0001733296 (PO:4500147282)		4 PAC	0 LB	
30	AN4-15A	BOLT (PKG 4)			
	Total Qty Ordered: 25.000 PAC Remaining Qty: 7.000				
	Batches				
	0001735828 (PO:4500147282)		18 PAC	2.124 LB	
40	MS21042L4	SELF-LOCK NUT (PKG 50)			
	Batches				
	0001723512 (PO:4500147282)		2 PAC	0 LB	

50 AN3-11A BACK ORDER ALL

Return Policies

Warranty Information

The manufacturer warrants most products sold by API. In addition, API will gladly process warranty claims for products originally purchased through API. API offers no additional warranty beyond that of the manufacturer. Many manufacturers include warranty information in their packaging. Please feel free to contact an API Quality Service Representative concerning warranty information or to obtain the RMA (Return Materials Authorization) needed to file a warranty claim. To speak with an API Quality Service Representative dial 888-API-24X7 (888-274-2497). RMAs are valid for 30 days from date issued.

A warranty claim form and an RMA must accompany all products returned for warranty. Without this documentation API will not be able to assist you in filing your claim. Manufacturer warranty claim forms are available at WWW.APIWORLDWIDE.COM.

Please be advised that some manufacturers honor warranties by remanufacturing the part rather than issuing credit. API will return the remanufactured part to the customer.

Returns Made Easy

API accepts most returns that were purchased from our stock within 30 days of invoke. Just call an API Quality Service Representative at 888-API-24X7 (888-274-2497) to obtain the necessary RMA (Return Materials Authorization) number. By simply including the API RMA with your return, the time needed to issue credit is minimized. Nobody enjoys having to return parts. API understands this and makes it as trouble-free as possible. Remember, all returned items must be in their original packaging, must be in new, uninstalled condition and include all original documentation. A restocking fee of 15%, with a minimum of $25.00, will be assessed on all stocked items except those due to an error on API's part. RMAs are valid for 30 days from the date of issue.

No returns will be accepted 30 days from the date of invoice. Please remember that Electrical Components, Shelf-Life Limited, Non-Stock items, Drop-ship Items and Special Orders are non-returnable. Once the RMA expires the return can no longer be accepted by API and will be returned at the customer's expense.

Quick Core Credit

When ordering exchange items, the API system will automatically assign the necessary RMA (Return Materials Authorization) number to return your core. The API CSR will supply you with any additional details needed to return your core. All cores are subject to final inspection and acceptance from the vendor or manufacturer. Unless prior written authorization is obtained from API, all cores must be "like part numbers" and must be in serviceable condition. Otherwise, API will pass on any fees assessed by our manufacturer for substandard or unlike cores.

The API RMA system will print a Core Letter, which includes the customer's name and the API delivery number in which the exchange was purchased. The Core Letter must accompany all core returns. This RMA is valid for 60 days from date of invoice. Please ask your API Quality Service Representative for the return due date of your particular core. Once the RMA expires the core can no longer be accepted by API and will be returned at the customer's expense. *In the event your Return Core Letter is misplaced, contact the API Quality Service Representative to obtain a replacement.*

We appreciate your business and reaffirm our commitment to provide the most responsive customer service, as well as the highest quality compliant products, at competitive prices.

API
AEROSPACE PRODUCTS INTERNATIONAL

API
#550 - 575 Palmer Road N.E.
CALGARY AB T2E 7G4
CANADA

05/09/2011 13:34:17

Pack List

Shipping Address
AERO DESIGN LTD
2013 39 AVE NE
CALGARY AB T2E 6R7
CANADA

Information
Document Number: 80879643

Item	Material	Material Description	Quantity	Weight	Batch Num

Shipping and Packing Instructions

CERTIFICATE OF CONFORMANCE

I hereby certify that th eaircraft parts described hereon were acquired from a source of supply that is consistent with the conditions under which Transport Canada distributor approval number 77-98 has been granted.

Authorized Signature _____ AO # 77-98 API # 11

Return Policies

Warranty Information

The manufacturer warrants most products sold by API. In addition, API will gladly process warranty claims for products originally purchased through API. API offers no additional warranty beyond that of the manufacturer. Many manufacturers include warranty information in their packaging. Please feel free to contact an API Quality Service Representative concerning warranty information or to obtain the RMA (Return Materials Authorization) needed to file a warranty claim. To speak with an API Quality Service Representative dial 888-API-24X7 (888-274-2497). RMAs are valid for 30 days from date issued.

A warranty claim form and an RMA must accompany all products returned for warranty. Without this documentation API will not be able to assist you in filing your claim. Manufacturer warranty claim forms are available at WWW.APIWORLDWIDE.COM.

Please be advised that some manufacturers honor warranties by remanufacturing the part rather than issuing credit. API will return the remanufactured part to the customer.

Returns Made Easy

API accepts most returns that were purchased from our stock within 30 days of invoke. Just call an API Quality Service Representative at 888-API-24X7 (888-274-2497) to obtain the necessary RMA (Return Materials Authorization) number. By simply including the API RMA with your return, the time needed to issue credit is minimized. Nobody enjoys having to return parts. API understands this and makes it as trouble-free as possible. Remember, all returned items must be in their original packaging, must be in new, uninstalled condition and include all original documentation. A restocking fee of 15%, with a minimum of $25.00, will be assessed on all stocked items except those due to an error on API's part. RMAs are valid for 30 days from the date of issue.

No returns will be accepted 30 days from the date of invoice. Please remember that Electrical Components, Shelf-Life Limited, Non-Stock items, Drop-ship Items and Special Orders are non-returnable. Once the RMA expires the return can no longer be accepted by API and will be returned at the customer's expense.

Quick Core Credit

When ordering exchange items, the API system will automatically assign the necessary RMA (Return Materials Authorization) number to return your core. The API CSR will supply you with any additional details needed to return your core. All cores are subject to final inspection and acceptance from the vendor or manufacturer. Unless prior written authorization is obtained from API, all cores must be "like part numbers" and must be in serviceable condition. Otherwise, API will pass on any fees assessed by our manufacturer for substandard or unlike cores.

The API RMA system will print a Core Letter, which includes the customer's name and the API delivery number in which the exchange was purchased. The Core Letter must accompany all core returns. This RMA is valid for 60 days from date of invoice. Please ask your API Quality Service Representative for the return due date of your particular core. Once the RMA expires the core can no longer be accepted by API and will be returned at the customer's expense. *In the event your Return Core Letter is misplaced, contact the API Quality Service Representative to obtain a replacement.*

We appreciate your business and reaffirm our commitment to provide the most responsive customer service, as well as the highest quality compliant products, at competitive prices.

API
AEROSPACE PRODUCTS INTERNATIONAL

API
2461 46th Ave.
LACHINE QC H8T 3C9
CANADA

05/05/2011 15:47:45

Pack List

Shipping Address
AERO DESIGN LTD
2013 39 AVE NE
CALGARY AB T2E 6R7
CANADA

Forwarding Agent's Address

Shipping Instructions
Detailed Shipping Instructions at the end of the document

Packing Instructions
Detailed Packing Instructions at the end of the document

Information

Document Number	80878714
Document Date	05/05/2011
Purchase Order No.	11052
Purchase Order Date	05/05/2011
Sales Order Number	781623
Sales Order Date	05/05/2011
Customer Number	5101060
Shipping Conditions	Will Call
Incoterms	
Cust Ship Acct	
Delivery Date	05/05/2011
Bill of Lading	
Total Weight	1.420 LB
Total Volume	1,745.200 IN3
Carrier	UPS CANADA

Item	Material	Material Description	Quantity	Weight	Batch Num
10	AN970-3	WIDE AREA WASHER (PKG 25)			
	Batches				
	0001725833 (PO:4500141398)		4 PAC	1 LB	
20	NAS1149F0332 P	WASHER (PKG 100)			
	Batches				
	0001706654 (PO:4500131312)		4 PAC	0.420 LB	

Shipping and Packing Instructions
SHIP TO CALGARY BRANCH WITH OTHER GOODS - AB

CERTIFICATE OF CONFORMANCE

I hereby certify that th eaircraft parts described hereon were acquired from a source of supply that is consistent with the conditions under which Transport Canada distributor approval number 77-98 has been granted.

Authorized Signature

AO # 77-98
API # 11

Return Policies

Warranty Information

The manufacturer warrants most products sold by API. In addition, API will gladly process warranty claims for products originally purchased through API. API offers no additional warranty beyond that of the manufacturer. Many manufacturers include warranty information in their packaging. Please feel free to contact an API Quality Service Representative concerning warranty information or to obtain the RMA (Return Materials Authorization) needed to file a warranty claim. To speak with an API Quality Service Representative dial 888-API-24X7 (888-274-2497). RMAs are valid for 30 days from date issued.

A warranty claim form and an RMA must accompany all products returned for warranty. Without this documentation API will not be able to assist you in filing your claim. Manufacturer warranty claim forms are available at WWW.APIWORLDWIDE.COM.

Please be advised that some manufacturers honor warranties by remanufacturing the part rather than issuing credit. API will return the remanufactured part to the customer.

Returns Made Easy

API accepts most returns that were purchased from our stock within 30 days of invoke. Just call an API Quality Service Representative at 888-API-24X7 (888-274-2497) to obtain the necessary RMA (Return Materials Authorization) number. By simply including the API RMA with your return, the time needed to issue credit is minimized. Nobody enjoys having to return parts. API understands this and makes it as trouble-free as possible. Remember, all returned items must be in their original packaging, must be in new, uninstalled condition and include all original documentation. A restocking fee of 15%, with a minimum of $25.00, will be assessed on all stocked items except those due to an error on API's part. RMAs are valid for 30 days from the date of issue.

No returns will be accepted 30 days from the date of invoice. Please remember that Electrical Components, Shelf-Life Limited, Non-Stock items, Drop-ship Items and Special Orders are non-returnable. Once the RMA expires the return can no longer be accepted by API and will be returned at the customer's expense.

Quick Core Credit

When ordering exchange items, the API system will automatically assign the necessary RMA (Return Materials Authorization) number to return your core. The API CSR will supply you with any additional details needed to return your core. All cores are subject to final inspection and acceptance from the vendor or manufacturer. Unless prior written authorization is obtained from API, all cores must be "like part numbers" and must be in serviceable condition. Otherwise, API will pass on any fees assessed by our manufacturer for substandard or unlike cores.

The API RMA system will print a Core Letter, which includes the customer's name and the API delivery number in which the exchange was purchased. The Core Letter must accompany all core returns. This RMA is valid for 60 days from date of invoice. Please ask your API Quality Service Representative for the return due date of your particular core. Once the RMA expires the core can no longer be accepted by API and will be returned at the customer's expense. *In the event your Return Core Letter is misplaced, contact the API Quality Service Representative to obtain a replacement.*

We appreciate your business and reaffirm our commitment to provide the most responsive customer service, as well as the highest quality compliant products, at competitive prices.

PRICING LIST

API
AEROSPACE PRODUCTS INTERNATIONAL

API
2461 46th Ave.
LACHINE QC H8T 3C9
CANADA
Phone: 514-636-5720
Fax: 514-636-6092
GST # 143526788RT

NUMBER	DATE
80878714	05/05/2011

PLEASE REMIT TO:
PO Box
Calgary AB T2P 2H6
REFER TO INVOICE NUMBER WHEN REMITTING

5101060

BILL TO AERO DESIGN LTD
2013 39 AVE NE
CALGARY AB T2E 6R7
CANADA

5101060

SHIP TO AERO DESIGN LTD
2013 39 AVE NE
CALGARY AB T2E 6R7
CANADA

Phone No: 403-250-8027

CUSTOMER PURCHASE ORDER NO.	ORDER NO. / DELIVERY NO.
11052	781623 - 80878714

SHIPPED VIA	DELIVERING PLANT	CARTONS
	API - Montreal	1

QUANTITY ORDERED	QUANTITY SHIPPED	DESCRIPTION MATERIAL		U/M	LIST PRICE	UNIT PRICE	EXTENDED PRICE
4		WIDE AREA WASHER (PKG 25)	AN970-3	PA	3.82	2.29	9.16
4		WASHER (PKG 100)	NAS1149F0332P	PA	4.01	2.41	9.64
		Item Total					18.80
		Canadian GST					0.94

TOTAL CAD 19.74

Return Policies

Warranty Information

The manufacturer warrants most products sold by API. In addition, API will gladly process warranty claims for products originally purchased through API. API offers no additional warranty beyond that of the manufacturer. Many manufacturers include warranty information in their packaging. Please feel free to contact an API Quality Service Representative concerning warranty information or to obtain the RMA (Return Materials Authorization) needed to file a warranty claim. To speak with an API Quality Service Representative dial 888-API-24X7 (888-274-2497). RMAs are valid for 30 days from date issued.

A warranty claim form and an RMA must accompany all products returned for warranty. Without this documentation API will not be able to assist you in filing your claim. Manufacturer warranty claim forms are available at WWW.APIWORLDWIDE.COM.

Please be advised that some manufacturers honor warranties by remanufacturing the part rather than issuing credit. API will return the remanufactured part to the customer.

Returns Made Easy

API accepts most returns that were purchased from our stock within 30 days of invoke. Just call an API Quality Service Representative at 888-API-24X7 (888-274-2497) to obtain the necessary RMA (Return Materials Authorization) number. By simply including the API RMA with your return, the time needed to issue credit is minimized. Nobody enjoys having to return parts. API understands this and makes it as trouble-free as possible. Remember, all returned items must be in their original packaging, must be in new, uninstalled condition and include all original documentation. A restocking fee of 15%, with a minimum of $25.00, will be assessed on all stocked items except those due to an error on API's part. RMAs are valid for 30 days from the date of issue.

No returns will be accepted 30 days from the date of invoice. Please remember that Electrical Components, Shelf-Life Limited, Non-Stock items, Drop-ship Items and Special Orders are non-returnable. Once the RMA expires the return can no longer be accepted by API and will be returned at the customer's expense.

Quick Core Credit

When ordering exchange items, the API system will automatically assign the necessary RMA (Return Materials Authorization) number to return your core. The API CSR will supply you with any additional details needed to return your core. All cores are subject to final inspection and acceptance from the vendor or manufacturer. Unless prior written authorization is obtained from API, all cores must be "like part numbers" and must be in serviceable condition. Otherwise, API will pass on any fees assessed by our manufacturer for substandard or unlike cores.

The API RMA system will print a Core Letter, which includes the customer's name and the API delivery number in which the exchange was purchased. The Core Letter must accompany all core returns. This RMA is valid for 60 days from date of invoice. Please ask your API Quality Service Representative for the return due date of your particular core. Once the RMA expires the core can no longer be accepted by API and will be returned at the customer's expense. *In the event your Return Core Letter is misplaced, contact the API Quality Service Representative to obtain a replacement.*

We appreciate your business and reaffirm our commitment to provide the most responsive customer service, as well as the highest quality compliant products, at competitive prices.

API
AEROSPACE PRODUCTS INTERNATIONAL

API
#550 - 575 Palmer Road N.E.
CALGARY AB T2E 7G4
CANADA
Phone: 403-250-9383
Fax: 403-250-8186
GST # 143526788RT

PRICING LIST

NUMBER	DATE
80879643	05/09/2011

PLEASE REMIT TO:
PO Box
Calgary AB T2P 2H6
REFER TO INVOICE NUMBER WHEN REMITTING

5101060

BILL TO AERO DESIGN LTD
2013 39 AVE NE
CALGARY AB T2E 6R7
CANADA

5101060

SHIP TO AERO DESIGN LTD
2013 39 AVE NE
CALGARY AB T2E 6R7
CANADA

Phone No: 403-250-8027

CUSTOMER PURCHASE ORDER NO.	ORDER NO. / DELIVERY NO.
11052	781843 - 80879643

SHIPPED VIA	DELIVERING PLANT	CARTONS
	API - Calgary	1

QUANTITY ORDERED	QUANTITY SHIPPED	DESCRIPTION MATERIAL		U/M	LIST PRICE	UNIT PRICE	EXTENDED PRICE
1,000		CHERRY RIVET (SELL ONLY IN BAG	CR3213-4-2	EA	1.13	0.68	680.00
20		BOLT (PKG 10)	AN4-14A	PA	9.73	4.38	87.60
25		BOLT (PKG 4) Back Order QTY: 7	AN4-15A	PA	4.71	2.12	38.16
2		SELF-LOCK NUT (PKG 50)	MS21042L4	PA	50.11	22.55	45.10
		Item Total					850.86
		Canadian GST					42.55

TOTAL CAD 893.41

Return Policies

Warranty Information

The manufacturer warrants most products sold by API. In addition, API will gladly process warranty claims for products originally purchased through API. API offers no additional warranty beyond that of the manufacturer. Many manufacturers include warranty information in their packaging. Please feel free to contact an API Quality Service Representative concerning warranty information or to obtain the RMA (Return Materials Authorization) needed to file a warranty claim. To speak with an API Quality Service Representative dial 888-API-24X7 (888-274-2497). RMAs are valid for 30 days from date issued.

A warranty claim form and an RMA must accompany all products returned for warranty. Without this documentation API will not be able to assist you in filing your claim. Manufacturer warranty claim forms are available at WWW.APIWORLDWIDE.COM.

Please be advised that some manufacturers honor warranties by remanufacturing the part rather than issuing credit. API will return the remanufactured part to the customer.

Returns Made Easy

API accepts most returns that were purchased from our stock within 30 days of invoke. Just call an API Quality Service Representative at 888-API-24X7 (888-274-2497) to obtain the necessary RMA (Return Materials Authorization) number. By simply including the API RMA with your return, the time needed to issue credit is minimized. Nobody enjoys having to return parts. API understands this and makes it as trouble-free as possible. Remember, all returned items must be in their original packaging, must be in new, uninstalled condition and include all original documentation. A restocking fee of 15%, with a minimum of $25.00, will be assessed on all stocked items except those due to an error on API's part. RMAs are valid for 30 days from the date of issue.

No returns will be accepted 30 days from the date of invoice. Please remember that Electrical Components, Shelf-Life Limited, Non-Stock items, Drop-ship Items and Special Orders are non-returnable. Once the RMA expires the return can no longer be accepted by API and will be returned at the customer's expense.

Quick Core Credit

When ordering exchange items, the API system will automatically assign the necessary RMA (Return Materials Authorization) number to return your core. The API CSR will supply you with any additional details needed to return your core. All cores are subject to final inspection and acceptance from the vendor or manufacturer. Unless prior written authorization is obtained from API, all cores must be "like part numbers" and must be in serviceable condition. Otherwise, API will pass on any fees assessed by our manufacturer for substandard or unlike cores.

The API RMA system will print a Core Letter, which includes the customer's name and the API delivery number in which the exchange was purchased. The Core Letter must accompany all core returns. This RMA is valid for 60 days from date of invoice. Please ask your API Quality Service Representative for the return due date of your particular core. Once the RMA expires the core can no longer be accepted by API and will be returned at the customer's expense. *In the event your Return Core Letter is misplaced, contact the API Quality Service Representative to obtain a replacement.*

We appreciate your business and reaffirm our commitment to provide the most responsive customer service, as well as the highest quality compliant products, at competitive prices.

API
AEROSPACE PRODUCTS INTERNATIONAL

API
2461 46th Ave.
LACHINE QC H8T 3C9
CANADA

05/09/2011 15:20:44

Pack List

Shipping Address
AERO DESIGN LTD
2013 39 AVE NE
CALGARY AB T2E 6R7
CANADA

Forwarding Agent's Address

Shipping Instructions
Detailed Shipping Instructions at the end of the document

Packing Instructions
Detailed Packing Instructions at the end of the document

Information

Document Number	80878909
Document Date	05/05/2011
Purchase Order No.	11052
Purchase Order Date	05/05/2011
Sales Order Number	781843
Sales Order Date	05/05/2011
Customer Number	5101060
Shipping Conditions	Will Call
Incoterms	
Cust Ship Acct	
Delivery Date	05/05/2011
Bill of Lading	
Total Weight	0.780 LB
Total Volume	258 IN3
Carrier	UPS CANADA

Item	Material	Material Description	Quantity	Weight	Batch Num
10	AN3-11A	BOLT (PKG 10)			
	Batches				
	0001733311 (PO:4500141899)		6 PAC	0.780 LB	

Shipping and Packing Instructions

CERTIFICATE OF CONFORMANCE

I hereby certify that th eaircraft parts described hereon were acquired from a source of supply that is consistent with the conditions under which Transport Canada distributor approval number 77-98 has been granted.

Authorized Signature RW

AO # 77-98
API # 11

Return Policies

Warranty Information

The manufacturer warrants most products sold by API. In addition, API will gladly process warranty claims for products originally purchased through API. API offers no additional warranty beyond that of the manufacturer. Many manufacturers include warranty information in their packaging. Please feel free to contact an API Quality Service Representative concerning warranty information or to obtain the RMA (Return Materials Authorization) needed to file a warranty claim. To speak with an API Quality Service Representative dial 888-API-24X7 (888-274-2497). RMAs are valid for 30 days from date issued.

A warranty claim form and an RMA must accompany all products returned for warranty. Without this documentation API will not be able to assist you in filing your claim. Manufacturer warranty claim forms are available at WWW.APIWORLDWIDE.COM.

Please be advised that some manufacturers honor warranties by remanufacturing the part rather than issuing credit. API will return the remanufactured part to the customer.

Returns Made Easy

API accepts most returns that were purchased from our stock within 30 days of invoke. Just call an API Quality Service Representative at 888-API-24X7 (888-274-2497) to obtain the necessary RMA (Return Materials Authorization) number. By simply including the API RMA with your return, the time needed to issue credit is minimized. Nobody enjoys having to return parts. API understands this and makes it as trouble-free as possible. Remember, all returned items must be in their original packaging, must be in new, uninstalled condition and include all original documentation. A restocking fee of 15%, with a minimum of $25.00, will be assessed on all stocked items except those due to an error on API's part. RMAs are valid for 30 days from the date of issue.

No returns will be accepted 30 days from the date of invoice. Please remember that Electrical Components, Shelf-Life Limited, Non-Stock items, Drop-ship Items and Special Orders are non-returnable. Once the RMA expires the return can no longer be accepted by API and will be returned at the customer's expense.

Quick Core Credit

When ordering exchange items, the API system will automatically assign the necessary RMA (Return Materials Authorization) number to return your core. The API CSR will supply you with any additional details needed to return your core. All cores are subject to final inspection and acceptance from the vendor or manufacturer. Unless prior written authorization is obtained from API, all cores must be "like part numbers" and must be in serviceable condition. Otherwise, API will pass on any fees assessed by our manufacturer for substandard or unlike cores.

The API RMA system will print a Core Letter, which includes the customer's name and the API delivery number in which the exchange was purchased. The Core Letter must accompany all core returns. This RMA is valid for 60 days from date of invoice. Please ask your API Quality Service Representative for the return due date of your particular core. Once the RMA expires the core can no longer be accepted by API and will be returned at the customer's expense. *In the event your Return Core Letter is misplaced, contact the API Quality Service Representative to obtain a replacement.*

We appreciate your business and reaffirm our commitment to provide the most responsive customer service, as well as the highest quality compliant products, at competitive prices.

PRICING LIST

API
AEROSPACE PRODUCTS INTERNATIONAL

API
2461 46th Ave.
LACHINE QC H8T 3C9
CANADA
Phone: 514-636-5720
Fax: 514-636-6092
GST # 143526788RT

NUMBER	DATE
80878909	05/09/2011

PLEASE REMIT TO:
PO Box
Calgary AB T2P 2H6
REFER TO INVOICE NUMBER WHEN REMITTING

5101060

BILL TO AERO DESIGN LTD
2013 39 AVE NE
CALGARY AB T2E 6R7
CANADA

5101060

SHIP TO AERO DESIGN LTD
2013 39 AVE NE
CALGARY AB T2E 6R7
CANADA

Phone No: 403-250-8027

CUSTOMER PURCHASE ORDER NO.	ORDER NO. / DELIVERY NO.
11052	781843 - 80878909

SHIPPED VIA	DELIVERING PLANT	CARTONS
	API - Montreal	1

QUANTITY ORDERED	QUANTITY SHIPPED	DESCRIPTION MATERIAL	U/M	LIST PRICE	UNIT PRICE	EXTENDED PRICE
6		BOLT (PKG 10) AN3-11A	PA	4.71	2.12	12.72
		Item Total				12.72
		Canadian GST				0.64

TOTAL CAD 13.36

Return Policies

Warranty Information

The manufacturer warrants most products sold by API. In addition, API will gladly process warranty claims for products originally purchased through API. API offers no additional warranty beyond that of the manufacturer. Many manufacturers include warranty information in their packaging. Please feel free to contact an API Quality Service Representative concerning warranty information or to obtain the RMA (Return Materials Authorization) needed to file a warranty claim. To speak with an API Quality Service Representative dial 888-API-24X7 (888-274-2497). RMAs are valid for 30 days from date issued.

A warranty claim form and an RMA must accompany all products returned for warranty. Without this documentation API will not be able to assist you in filing your claim. Manufacturer warranty claim forms are available at WWW.APIWORLDWIDE.COM.

Please be advised that some manufacturers honor warranties by remanufacturing the part rather than issuing credit. API will return the remanufactured part to the customer.

Returns Made Easy

API accepts most returns that were purchased from our stock within 30 days of invoke. Just call an API Quality Service Representative at 888-API-24X7 (888-274-2497) to obtain the necessary RMA (Return Materials Authorization) number. By simply including the API RMA with your return, the time needed to issue credit is minimized. Nobody enjoys having to return parts. API understands this and makes it as trouble-free as possible. Remember, all returned items must be in their original packaging, must be in new, uninstalled condition and include all original documentation. A restocking fee of 15%, with a minimum of $25.00, will be assessed on all stocked items except those due to an error on API's part. RMAs are valid for 30 days from the date of issue.

No returns will be accepted 30 days from the date of invoice. Please remember that Electrical Components, Shelf-Life Limited, Non-Stock items, Drop-ship Items and Special Orders are non-returnable. Once the RMA expires the return can no longer be accepted by API and will be returned at the customer's expense.

Quick Core Credit

When ordering exchange items, the API system will automatically assign the necessary RMA (Return Materials Authorization) number to return your core. The API CSR will supply you with any additional details needed to return your core. All cores are subject to final inspection and acceptance from the vendor or manufacturer. Unless prior written authorization is obtained from API, all cores must be "like part numbers" and must be in serviceable condition. Otherwise, API will pass on any fees assessed by our manufacturer for substandard or unlike cores.

The API RMA system will print a Core Letter, which includes the customer's name and the API delivery number in which the exchange was purchased. The Core Letter must accompany all core returns. This RMA is valid for 60 days from date of invoice. Please ask your API Quality Service Representative for the return due date of your particular core. Once the RMA expires the core can no longer be accepted by API and will be returned at the customer's expense. *In the event your Return Core Letter is misplaced, contact the API Quality Service Representative to obtain a replacement.*

We appreciate your business and reaffirm our commitment to provide the most responsive customer service, as well as the highest quality compliant products, at competitive prices.

API
AEROSPACE PRODUCTS INTERNATIONAL

API
#550 - 575 Palmer Road N.E.
CALGARY AB T2E 7G4
CANADA

05/18/2011 15:41:15

Pack List

Shipping Address
AERO DESIGN LTD
2013 39 AVE NE
CALGARY AB T2E 6R7
CANADA

Forwarding Agent's Address

Shipping Instructions
Detailed Shipping Instructions at the end of the document

Packing Instructions
Detailed Packing Instructions at the end of the document

Information

Document Number	80884468
Document Date	05/18/2011
Purchase Order No.	11052
Purchase Order Date	05/05/2011
Sales Order Number	781843
Sales Order Date	05/05/2011
Customer Number	5101060
Shipping Conditions	Will Call
Incoterms	
Cust Ship Acct	
Delivery Date	05/18/2011
Bill of Lading	
Total Weight	0.826 LB
Total Volume	1,732 IN3
Carrier	PICK UP BY CUSTOMER

Item	Material	Material Description	Quantity	Weight	Batch Num
10	AN4-15A	BOLT (PKG 4)			
	Batches				
	0001863455 (PO:4500147282)		7 PAC	0.826 LB	

Shipping and Packing Instructions

CERTIFICATE OF CONFORMANCE

I hereby certify that th eaircraft parts described hereon were acquired from a source of supply that is consistent with the conditions under which Transport Canada distributor approval number 77-98 has been granted.

Authorized Signature Rw

AO # 77-98
API # 11

Return Policies

Warranty Information

The manufacturer warrants most products sold by API. In addition, API will gladly process warranty claims for products originally purchased through API. API offers no additional warranty beyond that of the manufacturer. Many manufacturers include warranty information in their packaging. Please feel free to contact an API Quality Service Representative concerning warranty information or to obtain the RMA (Return Materials Authorization) needed to file a warranty claim. To speak with an API Quality Service Representative dial 888-API-24X7 (888-274-2497). RMAs are valid for 30 days from date issued.

A warranty claim form and an RMA must accompany all products returned for warranty. Without this documentation API will not be able to assist you in filing your claim. Manufacturer warranty claim forms are available at WWW.APIWORLDWIDE.COM.

Please be advised that some manufacturers honor warranties by remanufacturing the part rather than issuing credit. API will return the remanufactured part to the customer.

Returns Made Easy

API accepts most returns that were purchased from our stock within 30 days of invoke. Just call an API Quality Service Representative at 888-API-24X7 (888-274-2497) to obtain the necessary RMA (Return Materials Authorization) number. By simply including the API RMA with your return, the time needed to issue credit is minimized. Nobody enjoys having to return parts. API understands this and makes it as trouble-free as possible. Remember, all returned items must be in their original packaging, must be in new, uninstalled condition and include all original documentation. A restocking fee of 15%, with a minimum of $25.00, will be assessed on all stocked items except those due to an error on API's part. RMAs are valid for 30 days from the date of issue.

No returns will be accepted 30 days from the date of invoice. Please remember that Electrical Components, Shelf-Life Limited, Non-Stock items, Drop-ship Items and Special Orders are non-returnable. Once the RMA expires the return can no longer be accepted by API and will be returned at the customer's expense.

Quick Core Credit

When ordering exchange items, the API system will automatically assign the necessary RMA (Return Materials Authorization) number to return your core. The API CSR will supply you with any additional details needed to return your core. All cores are subject to final inspection and acceptance from the vendor or manufacturer. Unless prior written authorization is obtained from API, all cores must be "like part numbers" and must be in serviceable condition. Otherwise, API will pass on any fees assessed by our manufacturer for substandard or unlike cores.

The API RMA system will print a Core Letter, which includes the customer's name and the API delivery number in which the exchange was purchased. The Core Letter must accompany all core returns. This RMA is valid for 60 days from date of invoice. Please ask your API Quality Service Representative for the return due date of your particular core. Once the RMA expires the core can no longer be accepted by API and will be returned at the customer's expense. *In the event your Return Core Letter is misplaced, contact the API Quality Service Representative to obtain a replacement.*

We appreciate your business and reaffirm our commitment to provide the most responsive customer service, as well as the highest quality compliant products, at competitive prices.

API
AEROSPACE PRODUCTS INTERNATIONAL

API
#550 - 575 Palmer Road N.E.
CALGARY AB T2E 7G4
CANADA
Phone: 403-250-9383
Fax: 403-250-8186
GST # 143526788RT

PRICING LIST

NUMBER	DATE
80884468	05/18/2011

PLEASE REMIT TO:
PO Box
Calgary AB T2P 2H6
REFER TO INVOICE NUMBER WHEN REMITTING

5101060

BILL TO AERO DESIGN LTD
2013 39 AVE NE
CALGARY AB T2E 6R7
CANADA

5101060

SHIP TO AERO DESIGN LTD
2013 39 AVE NE
CALGARY AB T2E 6R7
CANADA

Phone No: 403-250-8027

CUSTOMER PURCHASE ORDER NO.	ORDER NO. / DELIVERY NO.
11052	781843 - 80884468

SHIPPED VIA	DELIVERING PLANT	CARTONS
	API - Calgary	1

QUANTITY ORDERED	QUANTITY SHIPPED	DESCRIPTION MATERIAL	U/M	LIST PRICE	UNIT PRICE	EXTENDED PRICE
25		BOLT (PKG 4) AN4-15A Back Order QTY: 18	PA	4.71	2.12	14.84
		Item Total				14.84
		Canadian GST				0.74

TOTAL CAD 15.58

Return Policies

Warranty Information

The manufacturer warrants most products sold by API. In addition, API will gladly process warranty claims for products originally purchased through API. API offers no additional warranty beyond that of the manufacturer. Many manufacturers include warranty information in their packaging. Please feel free to contact an API Quality Service Representative concerning warranty information or to obtain the RMA (Return Materials Authorization) needed to file a warranty claim. To speak with an API Quality Service Representative dial 888-API-24X7 (888-274-2497). RMAs are valid for 30 days from date issued.

A warranty claim form and an RMA must accompany all products returned for warranty. Without this documentation API will not be able to assist you in filing your claim. Manufacturer warranty claim forms are available at WWW.APIWORLDWIDE.COM.

Please be advised that some manufacturers honor warranties by remanufacturing the part rather than issuing credit. API will return the remanufactured part to the customer.

Returns Made Easy

API accepts most returns that were purchased from our stock within 30 days of invoke. Just call an API Quality Service Representative at 888-API-24X7 (888-274-2497) to obtain the necessary RMA (Return Materials Authorization) number. By simply including the API RMA with your return, the time needed to issue credit is minimized. Nobody enjoys having to return parts. API understands this and makes it as trouble-free as possible. Remember, all returned items must be in their original packaging, must be in new, uninstalled condition and include all original documentation. A restocking fee of 15%, with a minimum of $25.00, will be assessed on all stocked items except those due to an error on API's part. RMAs are valid for 30 days from the date of issue.

No returns will be accepted 30 days from the date of invoice. Please remember that Electrical Components, Shelf-Life Limited, Non-Stock items, Drop-ship Items and Special Orders are non-returnable. Once the RMA expires the return can no longer be accepted by API and will be returned at the customer's expense.

Quick Core Credit

When ordering exchange items, the API system will automatically assign the necessary RMA (Return Materials Authorization) number to return your core. The API CSR will supply you with any additional details needed to return your core. All cores are subject to final inspection and acceptance from the vendor or manufacturer. Unless prior written authorization is obtained from API, all cores must be "like part numbers" and must be in serviceable condition. Otherwise, API will pass on any fees assessed by our manufacturer for substandard or unlike cores.

The API RMA system will print a Core Letter, which includes the customer's name and the API delivery number in which the exchange was purchased. The Core Letter must accompany all core returns. This RMA is valid for 60 days from date of invoice. Please ask your API Quality Service Representative for the return due date of your particular core. Once the RMA expires the core can no longer be accepted by API and will be returned at the customer's expense. *In the event your Return Core Letter is misplaced, contact the API Quality Service Representative to obtain a replacement.*

We appreciate your business and reaffirm our commitment to provide the most responsive customer service, as well as the highest quality compliant products, at competitive prices.

API
AEROSPACE PRODUCTS INTERNATIONAL

API
#550 - 575 Palmer Road N.E.
CALGARY AB T2E 7G4
CANADA

05/19/2011 13:29:33

Pack List

Shipping Address
AERO DESIGN LTD
2013 39 AVE NE
CALGARY AB T2E 6R7
CANADA

Forwarding Agent's Address

Shipping Instructions
Detailed Shipping Instructions at the end of the document

Packing Instructions
Detailed Packing Instructions at the end of the document

Information

Document Number	80884701
Document Date	05/19/2011
Purchase Order No.	11052
Purchase Order Date	05/05/2011
Sales Order Number	781843
Sales Order Date	05/05/2011
Customer Number	5101060
Shipping Conditions	Will Call
Incoterms	
Cust Ship Acct	
Delivery Date	05/19/2011
Bill of Lading	
Total Weight	0.520 LB
Total Volume	1,702 IN3
Carrier	PICK UP BY CUSTOMER

Item	Material	Material Description	Quantity	Weight	Batch Num
10	AN3-11A	BOLT (PKG 10)			
	Batches				
	0001727843 (PO:4500147282)		4 PAC	0.520 LB	

Shipping and Packing Instructions

CERTIFICATE OF CONFORMANCE

I hereby certify that th eaircraft parts described hereon were acquired from a source of supply that is consistent with the conditions under which Transport Canada distributor approval number 77-98 has been granted.

Authorized Signature _____ AO # 77-98 API # 11

Return Policies

Warranty Information

The manufacturer warrants most products sold by API. In addition, API will gladly process warranty claims for products originally purchased through API. API offers no additional warranty beyond that of the manufacturer. Many manufacturers include warranty information in their packaging. Please feel free to contact an API Quality Service Representative concerning warranty information or to obtain the RMA (Return Materials Authorization) needed to file a warranty claim. To speak with an API Quality Service Representative dial 888-API-24X7 (888-274-2497). RMAs are valid for 30 days from date issued.

A warranty claim form and an RMA must accompany all products returned for warranty. Without this documentation API will not be able to assist you in filing your claim. Manufacturer warranty claim forms are available at WWW.APIWORLDWIDE.COM.

Please be advised that some manufacturers honor warranties by remanufacturing the part rather than issuing credit. API will return the remanufactured part to the customer.

Returns Made Easy

API accepts most returns that were purchased from our stock within 30 days of invoke. Just call an API Quality Service Representative at 888-API-24X7 (888-274-2497) to obtain the necessary RMA (Return Materials Authorization) number. By simply including the API RMA with your return, the time needed to issue credit is minimized. Nobody enjoys having to return parts. API understands this and makes it as trouble-free as possible. Remember, all returned items must be in their original packaging, must be in new, uninstalled condition and include all original documentation. A restocking fee of 15%, with a minimum of $25.00, will be assessed on all stocked items except those due to an error on API's part. RMAs are valid for 30 days from the date of issue.

No returns will be accepted 30 days from the date of invoice. Please remember that Electrical Components, Shelf-Life Limited, Non-Stock items, Drop-ship Items and Special Orders are non-returnable. Once the RMA expires the return can no longer be accepted by API and will be returned at the customer's expense.

Quick Core Credit

When ordering exchange items, the API system will automatically assign the necessary RMA (Return Materials Authorization) number to return your core. The API CSR will supply you with any additional details needed to return your core. All cores are subject to final inspection and acceptance from the vendor or manufacturer. Unless prior written authorization is obtained from API, all cores must be "like part numbers" and must be in serviceable condition. Otherwise, API will pass on any fees assessed by our manufacturer for substandard or unlike cores.

The API RMA system will print a Core Letter, which includes the customer's name and the API delivery number in which the exchange was purchased. The Core Letter must accompany all core returns. This RMA is valid for 60 days from date of invoice. Please ask your API Quality Service Representative for the return due date of your particular core. Once the RMA expires the core can no longer be accepted by API and will be returned at the customer's expense. *In the event your Return Core Letter is misplaced, contact the API Quality Service Representative to obtain a replacement.*

We appreciate your business and reaffirm our commitment to provide the most responsive customer service, as well as the highest quality compliant products, at competitive prices.

API
AEROSPACE PRODUCTS INTERNATIONAL

API
#550 - 575 Palmer Road N.E.
CALGARY AB T2E 7G4
CANADA
Phone: 403-250-9383
Fax: 403-250-8186
GST # 143526788RT

PRICING LIST

NUMBER	DATE
80884701	05/19/2011

PLEASE REMIT TO:
PO Box
Calgary AB T2P 2H6
REFER TO INVOICE NUMBER WHEN REMITTING

5101060

BILL TO AERO DESIGN LTD
2013 39 AVE NE
CALGARY AB T2E 6R7
CANADA

5101060

SHIP TO AERO DESIGN LTD
2013 39 AVE NE
CALGARY AB T2E 6R7
CANADA

Phone No: 403-250-8027

CUSTOMER PURCHASE ORDER NO.	ORDER NO. / DELIVERY NO.		
11052	781843 - 80884701		
SHIPPED VIA	DELIVERING PLANT	CARTONS	
	API - Calgary	1	

QUANTITY ORDERED	QUANTITY SHIPPED	DESCRIPTION MATERIAL	U/M	LIST PRICE	UNIT PRICE	EXTENDED PRICE
4		BOLT (PKG 10) AN3-11A	PA	4.71	2.12	8.48
		Item Total				8.48
		Canadian GST				0.42

TOTAL CAD 8.90

Return Policies

Warranty Information

The manufacturer warrants most products sold by API. In addition, API will gladly process warranty claims for products originally purchased through API. API offers no additional warranty beyond that of the manufacturer. Many manufacturers include warranty information in their packaging. Please feel free to contact an API Quality Service Representative concerning warranty information or to obtain the RMA (Return Materials Authorization) needed to file a warranty claim. To speak with an API Quality Service Representative dial 888-API-24X7 (888-274-2497). RMAs are valid for 30 days from date issued.

A warranty claim form and an RMA must accompany all products returned for warranty. Without this documentation API will not be able to assist you in filing your claim. Manufacturer warranty claim forms are available at WWW.APIWORLDWIDE.COM.

Please be advised that some manufacturers honor warranties by remanufacturing the part rather than issuing credit. API will return the remanufactured part to the customer.

Returns Made Easy

API accepts most returns that were purchased from our stock within 30 days of invoke. Just call an API Quality Service Representative at 888-API-24X7 (888-274-2497) to obtain the necessary RMA (Return Materials Authorization) number. By simply including the API RMA with your return, the time needed to issue credit is minimized. Nobody enjoys having to return parts. API understands this and makes it as trouble-free as possible. Remember, all returned items must be in their original packaging, must be in new, uninstalled condition and include all original documentation. A restocking fee of 15%, with a minimum of $25.00, will be assessed on all stocked items except those due to an error on API's part. RMAs are valid for 30 days from the date of issue.

No returns will be accepted 30 days from the date of invoice. Please remember that Electrical Components, Shelf-Life Limited, Non-Stock items, Drop-ship Items and Special Orders are non-returnable. Once the RMA expires the return can no longer be accepted by API and will be returned at the customer's expense.

Quick Core Credit

When ordering exchange items, the API system will automatically assign the necessary RMA (Return Materials Authorization) number to return your core. The API CSR will supply you with any additional details needed to return your core. All cores are subject to final inspection and acceptance from the vendor or manufacturer. Unless prior written authorization is obtained from API, all cores must be "like part numbers" and must be in serviceable condition. Otherwise, API will pass on any fees assessed by our manufacturer for substandard or unlike cores.

The API RMA system will print a Core Letter, which includes the customer's name and the API delivery number in which the exchange was purchased. The Core Letter must accompany all core returns. This RMA is valid for 60 days from date of invoice. Please ask your API Quality Service Representative for the return due date of your particular core. Once the RMA expires the core can no longer be accepted by API and will be returned at the customer's expense. *In the event your Return Core Letter is misplaced, contact the API Quality Service Representative to obtain a replacement.*

We appreciate your business and reaffirm our commitment to provide the most responsive customer service, as well as the highest quality compliant products, at competitive prices.

AERO Design Ltd.
2013 - 39th Avenue N.E.
Calgary, Alberta, T2E 6R7
Phone: (403) 250-8027
Fax: (403) 250-8333

Purchase Order

P.O. Number	**11051**
Date	05-May-11

Vendor:	
Name:	Metal Alloy Fabrication Ltd.
Address:	6060 - 86th Avenue SE Calgary, AB T2C 4L7
Phone:	403-279-8958
Fax:	406-279-3253
Attention:	Misty Tracy
Currency:	CAD

Ship To:	
Name:	AERO Design Ltd.
Address:	2013 - 39th Avenue N.E. Calgary, Alberta, T2E 6R7
Phone:	(403) 250-8027
Fax:	(403) 250-8333
Attention:	

ITEM	DESCRIPTION	QTY	RATE	AMOUNT
1	Laser cut - 76423-04 1" tube caps	100	1.47	147.00
		Subtotal		147.00
	Sales Tax	GST	5.00%	7.35
		Total	**CAD**	**$154.35**

SALES ORDER ACKNOWLEDGEMENT

FOR

Aero Design Ltd.
2013 39 Avenue N.E.
Calgary AB T2E 6R7

Metal Alloy Fabrication Limited

6060 - 86th Avenue S.E. Calgary, AB , T2C 4L7
Tel: (403)279-8958 Fax: (403)279-3253
E mail : Info@metalalloy.com

From the desk of: MISTY TRACY

ATTENTION: JEFF CLARKE **TEL: 403.250.8027** **FAX: 403.250.8333**

Sales Order	Ship Num	Cust No	Order Date	Tax	Promised	Salesman	Customer P. O. Number	Mark Shipment
0043987		ADL001	05/05/11	T	05/11/11	MISTY TRACY	11051	MAY 11TH 2011

F.O.B.	Ship Date	Shipped Via	Terms	Waybill Number	Ins
MAF DOCK	//	CUSTOMER PICK UP	Net 30 Day		N

Item	T	QUANTITY Order	B/O	Ship	Unit	Part Number	Description	Unit Price Can$
001	S	100.00			EA	ADL:D#76423-04	PART#76423-04	1.47
							TO LASER CUT ONLY AS PER YOUR DRAWING #76423-04 FROM CUSTOMERS SUPPLIED .035" 1018 MILD STEEL.	
							NOTE: FOR EASE OF SHIPPING PARTS WILL BE SHIPPED TO YOU IN SKELTON. PROMISED: 5/11/11	
							Order SubTotal	147.00
							GOODS AND SERVICE TA .05000	7.35
							Tax SubTotal	7.35
							Total Order Amount	154.35

QUOTATION

FOR

Aero Design Ltd.
2013 39 Avenue N.E.
Calgary, AB T2E 6R7

Metal Alloy Fabrication Limited

6060 - 86th Avenue S.E. Calgary, AB , T2C 4L7
Tel: (403)279-8958 Fax: (403)279-3253
E mail : info@metalalloy.com

From the Desk of : MISTY TRACY

ATT:N JEFF CLARKE **TEL: 403 . 250 . 8027** **FAX: 403 . 250 . 8333**

Quote No. & Date	Cust No	S/M	Your Reference	Delivery Promise	F.O.B.	Expiry
4031969 05/05/11	ADL001	MIT	RFQ NUMBER	4 - 6 DAYS	MAF DOCK	30 DAYS

Item	Quantity	UM	Part	Description	Price	Extension
001	100.00	EA	ADL:D#76423-04	PART#76423-04 TO LASER CUT ONLY AS PER YOUR DRAWING #76423-04 FROM CUSTOMERS SUPPLIED .035" 1018 MILD STEEL. NOTE: FOR EASE OF SHIPPING PARTS WILL BE SHIPPED TO YOU IN SKELTON.	1.47	147.00

QUOTED PRICES DO NOT INCLUDE ANY APPLICABLE FEDERAL AND /OR PROVINCIAL SALES TAX

Thank you for the opportunity to provide a quotation to supply your requirements. If you have any questions please do not hesitate to contact us at 279-8958.
MAF Terms and Conditions of Sale are available on our website metalalloy.com

TO ACCEPT THIS QUOTE AND MAF'S TERMS AND CONDITIONS OF SALE, PLEASE MARK THE ACCEPTABLE QUANTITIES AND COSTS, SIGN AND DATE A COPY OF THIS QUOTATION AND FAX IT TO (403) 279-3253 ATTN: MISTY TRACY A SIGNED COPY IS REQUIRED BEFORE WE CAN PROCESS YOUR ORDER,

Print Name: JEFF CLARKE Position Title: ENG. TECH.

Your P.O.# 11051 Signature: Jeff Clarke. Date: 05/05/11

Metal Alloy Fabrication Limited

6060 - 86th Avenue S.E. Calgary, AB , T2C 4L7
Tel: (403)279-8958 Fax: (403)279-3253
E mail : info@metalalloy.com

PACKING LIST

Special Instructions

☐ Cert Enclosed ☐ Partial Ship ☐ Complete Ship

Goods Received in Good Condition

By: _____

Date: _____

SOLD TO: Aero Design Ltd.
2013 39 Avenue N.E.
Calgary AB T2E 6R7

SHIP TO: Aero Design Ltd.
2013 39 Avenue N.E.
Calgary AB T2E 6R7

Sales Order	Ship Num	Cust No	Order Date	Tax	Promised	Sales Rep	Customer P.O. Num	Mark Shipment
0043987	0000	ADL001	05/05/11	T	05/11/11	MISTY TRACY	11051	MAY 11TH 2011

F.O.B. Point	Ship Date	Shipped Via	Cartons	Weight	Waybill Number	Ins
MAF DOCK	05/11/11	CUSTOMER PICK UP	0.00	0.00		N

Item	T	QUANTITY Order	B/O	Ship	Unit	Part Number/Revision	Description
001	S	100.00		100.00		ADL:D#76423-04	PART#76423-04 TO LASER CUT ONLY AS PER YOUR DRAWING #76423-04 FROM CUSTOMERS SUPPLIED .035" 1018 MILD STEEL. NOTE: FOR EASE OF SHIPPING PARTS WILL BE SHIPPED TO YOU IN SKELTON. PROMISED: 5/11/11

AERO Design Ltd.
2013 - 39th Avenue N.E.
Calgary, Alberta, T2E 6R7
Phone: (403) 250-8027
Fax: (403) 250-8333

Purchase Order

P.O. Number	**11049**
Date	03-May-11

Vendor:	
Name:	Earle M. Jorgensen (Canada) Inc.
Address:	9451 - 45 Avenue NW, Edmonton AB, T6E 6B9
Phone:	780-801-4015
Fax:	780-463-1215
Attention:	Paul Lopes
Currency:	CAD

Ship To:	
Name:	AERO Design Ltd.
Address:	2013 - 39th Avenue N.E. Calgary, Alberta, T2E 6R7
Phone:	(403) 250-8027
Fax:	(403) 250-8333
Attention:	

ITEM	DESCRIPTION	QTY	RATE	AMOUNT
1	4130 CDS Tube, MIL-T-6736 Cond N 1 x 1 x 0.065 x 17/24' R/L	100	12.80	1,280.00
2	4130 CDS Tube, MIL-T-6736 Cond N 0.5 x 0.5 x 0.035 x 17/24' R/L	500	5.25	2,625.00
3	4130 CDS Tube, MIL-T-6736 Cond N 0.75 x 0.75 x 0.035 x 17/24' R/L	500	6.00	3,000.00
4	4130 CDS Tube, MIL-T-6736 Cond N 0.313 OD x 0.058 x 17/24' R/L	40	8.50	340.00
		Subtotal		7,245.00
	Sales Tax	GST	5.00%	362.25
		Total	**CAD**	**$7,607.25**

EARLE M. JORGENSEN COMPANY

Order Confirmation

DATE: 5/3/2011
CUSTOMER NUMBER: 230337
QUOTE NUMBER: 178163
FOB: Delivered
CUSTOMER PO#: 11049

6925 8TH STREET NW
ATTN:
EDMONTON AB T6P 1T9

CUSTOMER:
AERO DESIGN LIMITED
2013- 39TH AVENUE NORTH EAST
CALGARY AB T2E 6R7
ATTENTION: JEFF CLARKE
PHONE NO: 403-2508027

SHIP TO:
AERO DESIGN LIMITED

2013- 39TH AVENUE NORTH EAST
CALGARY AB T2E 6R7

ITEM #	DESCRIPTION	ORDER QTY.	UOM	UNIT PRICE	EXT. PRICE	DATE/TYPE
105088	5 Tubes-100 FT 4130 CDS TUBING AMS T 6736 COND N; 1 X 1 X .065 W X 17/24' R/L **SHIP VIA:** OUR TRUCK Best Effort	100	FT	C$12.8000	C$1,280.00	5/12/2011
	LINE WEIGHT:	83	LB			

TOTAL WEIGHT:	83 LB
TOTAL:	C$1,280.00
Sales Tax:	C$64.00
Grand Total:	C$1,344.00

For further information about your order, please contact your material specialist: **PAUL LOPES**
E-Mail: **PLOPES@EMJMETALS.COM** Phone: **(780)801-4015** Fax: **(780)463-1215**

******PLEASE, VERIFY ITEMS ON THIS CONFIRMATION.******
IF NO DISCREPANCIES ARE REPORTED, YOUR ORDER WILL SHIP AS SHOWN.

CONDITIONS: All items are subject to prior sale. All items are subject to price in effect at time of shipment unless we have specifically noted otherwise. Delivery date based upon lead time of quotation and is subject to change at time of order. All weights are theoretical and may be subject to adjustment. Any process not specifically quoted in the above price will be an additional charge. These commodities are controlled for export by the United States governmentunder the Export Administration Regulations. Diversion contrary to U.S. law prohibited. Purchaser is responsible to comply with these regulations if the items are to be exported from the United States or re-exported from a foreign country. Please refer to our website for full terms & conditions at: http://www.emjmetals.com/about/Terms.htm.
TERMS OF PAYMENT: Invoices are issued as of the date of delivery covering deliveries from our stocks and as of the date of the shipment covering direct mill shipments. The acceptance of any order or specification and terms of payment on all sales and orders is subject to approval of the Sellers Credit Department, and Seller may at any time decline to make any shipment or delivery or perform any work except upon receipt of payment or security or upon terms and conditions satisfactory to Sellers Credit Department.

EARLE M. JORGENSEN COMPANY

Order Confirmation

DATE: 5/3/2011
CUSTOMER NUMBER: 230337
QUOTE NUMBER: 178121
FOB: Delivered
CUSTOMER PO#: 11049

6925 8TH STREET NW
ATTN:
EDMONTON AB T6P 1T9

CUSTOMER:
AERO DESIGN LIMITED
2013- 39TH AVENUE NORTH EAST
CALGARY AB T2E 6R7
ATTENTION: JEFF CLARKE
PHONE NO: 403-2508027

SHIP TO:
AERO DESIGN LIMITED

2013- 39TH AVENUE NORTH EAST
CALGARY AB T2E 6R7

ITEM #	DESCRIPTION	ORDER QTY.	UOM	UNIT PRICE	EXT. PRICE	DATE/TYPE
105076	25 Tubes-500 FT 4130 CDS TUBING AMS T 6736 COND N; .500 X .500 X .035 W X 17/24' R/L **SHIP VIA:** OUR TRUCK Best Effort	500	FT	C$5.2500	C$2,625.00	6/8/2011
	LINE WEIGHT:	111	LB			
105081	25 Tubes-500 FT 4130 CDS TUBING AMS T 6736 COND N; .750 X .750 X .035 W X 17/24' R/L **SHIP VIA:** OUR TRUCK Best Effort	500	FT	C$6.0000	C$3,000.00	5/12/2011
	LINE WEIGHT:	170	LB			

TOTAL WEIGHT:	281 LB
TOTAL:	C$5,625.00
Sales Tax:	C$281.25
Grand Total:	C$5,906.25

For further information about your order, please contact your material specialist: **PAUL LOPES**
E-Mail: **PLOPES@EMJMETALS.COM** Phone: **(780)801-4015** Fax: **(780)463-1215**

******PLEASE, VERIFY ITEMS ON THIS CONFIRMATION.******
IF NO DISCREPANCIES ARE REPORTED, YOUR ORDER WILL SHIP AS SHOWN.

CONDITIONS: All items are subject to prior sale. All items are subject to price in effect at time of shipment unless we have specifically noted otherwise. Delivery date based upon lead time of quotation and is subject to change at time of order. All weights are theoretical and may be subject to adjustment. Any process not specifically quoted in the above price will be an additional charge. These commodities are controlled for export by the United States governmentunder the Export Administration Regulations. Diversion contrary to U.S. law prohibited. Purchaser is responsible to comply with these regulations if the items are to be exported from the United States or re-exported from a foreign country. Please refer to our website for full terms & conditions at: http://www.emjmetals.com/about/Terms.htm.
TERMS OF PAYMENT: Invoices are issued as of the date of delivery covering deliveries from our stocks and as of the date of

EARLE M. JORGENSEN COMPANY

Order Confirmation

DATE: 5/3/2011
CUSTOMER NUMBER: 230337
QUOTE NUMBER: 178344
FOB: Delivered
CUSTOMER PO#: 11049

6925 8TH STREET NW
ATTN:
EDMONTON AB T6P 1T9

CUSTOMER:
AERO DESIGN LIMITED
2013- 39TH AVENUE NORTH EAST
CALGARY AB T2E 6R7
ATTENTION: JEFF CLARKE
PHONE NO: 403-2508027

SHIP TO:
AERO DESIGN LIMITED

2013- 39TH AVENUE NORTH EAST
CALGARY AB T2E 6R7

ITEM #	DESCRIPTION	ORDER QTY.	UOM	UNIT PRICE	EXT. PRICE	DATE/TYPE
100090	2 Tubes-40 FT 4130 CDS TUBING AMS T 6736 COND N; .313 OD X .058 W (.197 ID) X 17/24' R/L **SHIP VIA:** OUR TRUCK Best Effort	40	FT	C$8.5000	C$340.00	5/13/2011
	LINE WEIGHT:	6	LB			

TOTAL WEIGHT:	6 LB
TOTAL:	C$340.00
Sales Tax:	C$17.00
Grand Total:	C$357.00

For further information about your order, please contact your material specialist: **PAUL LOPES**
E-Mail: **PLOPES@EMJMETALS.COM** Phone: **(780)801-4015** Fax: **(780)463-1215**

******PLEASE, VERIFY ITEMS ON THIS CONFIRMATION.******
IF NO DISCREPANCIES ARE REPORTED, YOUR ORDER WILL SHIP AS SHOWN.

CONDITIONS: All items are subject to prior sale. All items are subject to price in effect at time of shipment unless we have specifically noted otherwise. Delivery date based upon lead time of quotation and is subject to change at time of order. All weights are theoretical and may be subject to adjustment. Any process not specifically quoted in the above price will be an additional charge. These commodities are controlled for export by the United States governmentunder the Export Administration Regulations. Diversion contrary to U.S. law prohibited. Purchaser is responsible to comply with these regulations if the items are to be exported from the United States or re-exported from a foreign country. Please refer to our website for full terms & conditions at: http://www.emjmetals.com/about/Terms.htm.
TERMS OF PAYMENT: Invoices are issued as of the date of delivery covering deliveries from our stocks and as of the date of the shipment covering direct mill shipments. The acceptance of any order or specification and terms of payment on all sales and orders is subject to approval of the Sellers Credit Department, and Seller may at any time decline to make any shipment or delivery or perform any work except upon receipt of payment or security or upon terms and conditions satisfactory to Sellers Credit Department.

FROM: EARLE M. JORGENSEN (CANADA)INC
6925 8TH STREET NW

EDMONTON

S.I.D. ORDER NO. T150983
ORDERED BY: JEFF CLARKE
PHONE: 403 250-8027
CUST. ORD. NO.: 11049

SOLD TO
AERO DESIGN LIMITED
2013- 39TH AVENUE NORTH EAST
CALGARY
AB T2E 6R7

SHIP TO
AERO DESIGN LIMITED
2013- 39TH AVENUE NORTH EAST
CALGARY
AB T2E 6R7
FAX: 403 2508333

PAGE 1 OF 1
876
A429460

XFER # 00423
000
T139407

DATE ORD.	CUSTOMER P.O.	F.O.B.	DEL AREA	VIA	CUST. ACCT.	PROM. DATE
03-MAY-11	11049	DESTIN	CALGARY	OUR TRUCK	230337	12-MAY-11

ORDER WGT.	I/S	TERR.	TYPE	TAX RATE	PPD/COLL	C.O.D.	TEST REPORT	SHIP DATE
201	003 PAUL LOPES		CT		PREPAID	2	0 PRO #	11-MAY-11

*** To be INDIRECT SHIPPED from Branch 00423

105081 4130 CDS TUBING AMS T 6736 COND N;
592.00 FT .750 X .750 X .035 W X 17/24' R/L 592.0000 FT
W/FT 0.3403 EXT WGT: 201
PT#105081 JOB/BTCH# 11049

Best Effort
ll sales subject to US Export Administration Regulations.
lease refer to http://www.emjmetals.com/about/Terms.htm
HEAT # 105111 LOCATION:TRANSFER Y
1 BND 25 PC
592 FT

The property described below in apparent good order except as noted (contents and condition of contents unknown) marked, consigned and destined as indicated below, which said carrier, (the word carrier being understood throughout this contract as meaning any person or corporation in possession of the property under the contract) agrees to carry to its usual place of delivery at said destination if on its route, otherwise to deliver to another carrier on the route to said destination it is mutually agreed as to each carrier of all or any of said property over all or any portion of said route to destination and as to each party at any time interested in all or any of said property that every service to be performed hereunder shall be subject to all terms and conditions of the Uniform Domestic Straight Bill of Lading set forth (1) in Official, Southern, Western, and Illinois freight Classification in effect on the date hereof, if this is a rail or rail water shipment, or (2) in the applicable motor carrier classification or tariff if this is a motor carrier shipment.
Shipper hereby certifies that he is familiar with all the terms and conditions of the said bill of lading, including those on the back thereof, set forth in the classification or tariff which governs the transportation of this shipment and the said terms and conditions are hereby agreed to by the shipper and accepted for himself and his assigns.

ECEIVED ABOVE GOODS
N TERMS AND CONDITIONS
PPEARING ON BACK OF INVOICE X

INVOICE AMT.	ADDITIONAL CHARGES	V.A.T. TAX	TAX/AMT.	TOTAL

NO. OF PKGS.	PKG. TYPE	NO. OF PKGS	PKG. TYPE	TOTAL PCS.	DESCRIPTION OF ARTICLES	SHIP WGT.	CLS
1	Ttl			1	I/S PIPE/TUBE <12" 52	201	050
					TOTAL		
				1		201	

PACKING SLIP

FREIGHT CHARGES ARE TO BE PRE-PAID UNLESS THIS BLOCK IS CHECKED. ☐

Subject to Section 7 of conditions, if this shipment is to be delivered to the consignee without recourse on the consignor, the consignor shall sign the following statement.
The carrier shall not make delivery of this shipment without payment of freight and all other lawful charges.
(Signature of Consignor)

CARRIER SEND FREIGHT BILL TO:

SHIPPER PER X

C.O.D. AMOUNT

C.O.D. FEE TO BE PAID BY
SHIPPER ☐ CONSIGNEE ☐

CARRIER
AGENT
PER:

Customer: AERO DESIGN LIMITED Ord #: T150983 Part #: 105088 Cust PO#: 11049

PLYMOUTH TUBE CO USA®
1209 East 12th Street, Streator, Illinois 61364
Phone: (815) 673-1515 Fax: (815) 672-7343

PRODUCT CERTIFICATION

SALES ORDER - LINE ITEM/RLS
078171 - 1 / 0

WORK ORDER 017451
HEAT NUMBER 105111
MELT SOURCE Tubos Reunidos - Spain

SOLD TO

Earle M. Jorgensen Co.
1900 Mitchell Blvd
Schaumburg, IL 60193
USA

R344364

ISO 9001:2000 AND TS 16949:2002 CERTIFIED

CUSTOMER P.O.	CUSTOMER PART	QUANTITY	LADING NO	SHIPMENT DATE
P344432 001	105081			

PART DESCRIPTION SHSQ0750035JEMJ
***** Square OD *****
Side1: 0.7500 Max:0.7600 Min:0.7400
Side2: 0.7500 Max:0.7600 Min:0.7400
Wall: 0.0350 Max:0.0380 Min:0.0320
Length: 19.00/24.00
Spec: Mil-T 6736B Seamless Aircraft
Grade: 4130
Anneal: Cond N

CERTIFICATION REQUIREMENTS
FAR BAA (FAR 52.225-1 Buy America Act Supplies). DFARS 252.225-7001 By America Act & Bal. of Payments Program FAR TAA (FAR 52.225-5 Trade Agreements)(Paragraph 1,3,4,5)This material was Eddy Current tested and conforms to the requirements of ASTM A-450.
The Grain size is determined and reported by the raw material supplier in accordance to ASTM E-112.
This raw material was magnetic particle inspected in accordance to AMS 2640J and/or ASTM E-1444, and rated as Frequency, and Severity to AMS 2301, latest revision.
Yield is determined by using the 0.2% offset method.

Chemical Analysis

C	Mn	P	S	Si	Al	Cr	Mo	Ni	Pb	Cu	V	Ti	Sn
.30	.47	.007	.001	.22	.020	.820	.160	.060	.004	.150	.012	.001	.008

Physical Properties

Freq.	Severity	Grain Size
.000	.000	8

Mechanical Properties

TEST	UNITS	#TESTS	HIGH	LOW	AVERAGE	STD-DEV
Tensile	Psi	3	113650	112490	113167	604
Yield	Psi	3	109970	108390	109207	791
Elongation	%	3	19	15	17	2
Rockwell B	Rb	3	98	98	98	0
Rockwell C	Rc					

TEST	RESULT
Decarb/OD	Pass
Total ID/OD decarb	Pass

Additional Specification(s)

AMS-T 6736B, 6360L & 6371J

I certify that the results are a true and correct copy of the records prepared and maintained by Plymouth Tube Company, Streator in compliance with the requirements of the cited specification. Chemistry is as reported by the Steel supplier. This test report cannot be reproduced or distributed except in full without the written permission of Plymouth Tube.

Mike Danko
Quality Assurance

Date Printed 01/21/2011

PLYMOUTH TUBE CO USA®
1209 East 12th Street, Streator, Illinois 61364
Phone: (815) 673-1515 Fax: (815) 672-7343

PRODUCT CERTIFICATION

SALES ORDER - LINE ITEM/RLS
078171 - 1 / 0

WORK ORDER 017451
HEAT NUMBER 105111
MELT SOURCE Tubos Reunidos - Spain

SOLD TO

Earle M. Jorgensen Co.
1900 Mitchell Blvd
Schaumburg, IL 60193
USA

ISO 9001:2000
AND
TS 16949:2002
CERTIFIED

CUSTOMER P.O.	CUSTOMER PART	QUANTITY	LADING NO	SHIPMENT DATE
P344432 001	105081			

This test report data is for the heat Chemistry Stated above.

The material in this test report is:

1) **Drawn in the USA**
2) Free from **Polybrominated Biphenyls (PBB), Polybrominated Diphenyl Ethers (PBDE),** and **Mercury** contamination.
3) **NAFTA** compliant.

End of Certification

I certify that the results are a true and correct copy of the records prepared and maintained by Plymouth Tube Company, Streator in compliance with the requirements of the cited specification. Chemistry is as reported by the Steel supplier. This test report cannot be reproduced or distributed except in full without the written permission of Plymouth Tube.

Mike Danko
Quality Assurance

Date Printed 01/21/2011

FROM: EARLE M. JORGENSEN (CANADA)INC
6925 8TH STREET NW

EDMONTON

S.I.D. ORDER NO. T150994
ORDERED BY: JEFF CLARKE
PHONE: 403 250-8027
CUST. ORD. NO.: 11049

SOLD TO
AERO DESIGN LIMITED
2013- 39TH AVENUE NORTH EAST
CALGARY
AB T2E 6R7

SHIP TO
AERO DESIGN LIMITED
2013- 39TH AVENUE NORTH EAST
CALGARY
AB T2E 6R7
FAX: 403 2508333
000

PAGE 1 OF 1
M516KPL1
A573900

XFER # 00423
T139998

DATE ORD.	CUSTOMER P.O.	F.O.B.	DEL AREA	VIA	CUST. ACCT.	PROM. DATE
03-MAY-11	11049	DESTIN	CALGARY	OUR TRUCK	230337	16-MAY-11

ORDER WGT.	I/S	TERR.	TYPE	TAX RATE	PPD/COLL	C.O.D.	TEST REPORT	SHIP DATE
6	003 PAUL LOPES		CT		PREPAID	2	0 PRO # Y	17-MAY-11

*** To be INDIRECT SHIPPED from Branch 00423

100090 4130 CDS TUBING AMS T 6736 COND N;
37.00 FT .313 OD X .058 W (.197 ID) X 17/24' R/L 37.0000 FT
W/FT 0.1580 EXT WGT: 6
PT#100090 JOB/BTCH# 11049

Best Effort
ll sales subject to US Export Administration Regulations.
lease refer to http://www.emjmetals.com/about/Terms.htm
HEAT # 550539 LOCATION:TRANSFER Y
1 BND 2 PC
37 FT

The property described below in apparent good order except as noted (contents and condition of contents unknown) marked, consigned and destined as indicated below, which said carrier, (the word carrier being understood throughout this contract as meaning any person or corporation in possession of the property under the contract) agrees to carry to its usual place of delivery at said destination if on its route, otherwise to deliver to another carrier on the route to said destination it is mutually agreed as to each carrier of all or any of said property over all or any portion of said route to destination and as to each party at any time interested in all or any of said property that every service to be performed hereunder shall be subject to all terms and conditions of the Uniform Domestic Straight Bill of Lading set forth (1) in Official, Southern, Western, and Illinois freight Classification in effect on the date hereof, if this is a rail or rail water shipment, or (2) in the applicable motor carrier classification or tariff if this is a motor carrier shipment.
Shipper hereby certifies that he is familiar with all the terms and conditions of the said bill of lading, including those on the back thereof, set forth in the classification or tariff which governs the transportation of this shipment and the said terms and conditions are hereby agreed to by the shipper and accepted for himself and his assigns.

ECEIVED ABOVE GOODS
N TERMS AND CONDITIONS
PPEARING ON BACK OF INVOICE X

INVOICE AMT.	ADDITIONAL CHARGES	V.A.T. TAX	TAX/AMT.	TOTAL

NO. OF PKGS.	PKG. TYPE	NO. OF PKGS	PKG. TYPE	TOTAL PCS.	DESCRIPTION OF ARTICLES	SHIP WGT.	CLS
1	Ttl			1	I/S PIPE/TUBE <12" 52	6	050
PACKING SLIP				1	TOTAL	6	

FREIGHT CHARGES ARE TO BE PRE-PAID UNLESS THIS BLOCK IS CHECKED. ☐

Subject to Section 7 of conditions, if this shipment is to be delivered to the consignee without recourse on the consignor, the consignor shall sign the following statement. The carrier shall not make delivery of this shipment without payment of freight and all other lawful charges.
(Signature of Consignor)

CARRIER SEND FREIGHT BILL TO:

SHIPPER PER X

C.O.D. AMOUNT

C.O.D. FEE TO BE PAID BY
SHIPPER ☐ CONSIGNEE ☐

CARRIER
AGENT
PER:

Customer: AERO DESIGN LIMITED O[redacted]: T150994 Part #: 50-2163 Cust PO#: 1[redacted]9

PLYMOUTH TUBE CO USA®

1209 East 12th Street, Streator, Illinois 61364
Phone: (815) 673-1515 Fax: (815) 672-7343

PRODUCT CERTIFICATION

SALES ORDER - LINE ITEM/RLS
063301 - 1 / 0

WORK ORDER 015982
HEAT NUMBER 550539 R877364
MELT SOURCE Benteler Steel & Tube-Germany

SOLD TO

Earle M. Jorgensen Co.
1900 Mitchell Blvd
Schaumburg, IL 60193
USA

ISO 9001:2000
AND
TS 16949:2002
CERTIFIED

CUSTOMER P.O.	CUSTOMER PART	QUANTITY	LADING NO	SHIPMENT DATE
P250681 001	100090			

PART DESCRIPTION H03130580JEMJ
OD: 0.3130" Max: 0.3170" Min: 0.3130"
Wall: 0.0580" Max: 0.0630" Min: 0.0530"
Length: 19.00' /24.00'
Spec: Mil-T 6736B Seamless Aircraft
Grade: 4130
Finish: Cond N

CERTIFICATION REQUIREMENTS
FAR BAA (FAR 52.225-1 Buy America Act Supplies). DFARS 252.225-7001 By America Act & Bal. of Payments Program FAR TAA (FAR 52.225-5 Trade Agreements)(Paragraph 1,3,4,5)This material was Eddy Current tested and conforms to the requirements of ASTM A-450.
The Grain size is determined and reported by the raw material supplier in accordance to ASTM E-112.
This raw material was magnetic particle inspected by the raw material supplier in accordance to AMS 2640J and/or ASTM E-1444, and rated as Frequency, and Severity to AMS 2301, latest revision.
Yield is determined by using the 0.2% offset method.

Chemical Analysis

C	Mn	P	S	Si	Al	Cr	Mo	Ni	Pb	Cu	V	Ti	Sn
.300	.54	.008	.001	.230	.034	.92	.17	.09	.001	.12	.003	.002	.015

Physical Properties

Freq.	Severity	Grain Size
.059	.039	8

Mechanical Properties

TEST	UNITS	#TESTS	HIGH	LOW	AVERAGE	STD-DEV
Tensile	Psi	3	114290	113860	114083	215
Yield	Psi	3	111870	110440	111090	724
Elongation	%	3	15	13	14	1
Rockwell B	Rb	3	99	99	99	0
Rockwell C	Rc					

TEST	RESULT
Decarb/OD	Pass
Total ID/OD decarb	Pass

Additional Specification(s)

Complies to AMS-T 6736B

I certify that the results are a true and correct copy of the records prepared and maintained by Plymouth Tube Company, Streator in compliance with the requirements of the cited specification. Chemistry is as reported by the Steel supplier. This test report cannot be reproduced or distributed except in full without the written permission of Plymouth Tube.

Mike Danko
Quality Assurance

Date Printed 09/28/2009

PLYMOUTH TUBE CO USA®
1209 East 12th Street, Streator, Illinois 61364
Phone: (815) 673-1515 Fax: (815) 672-7343

PRODUCT CERTIFICATION

SALES ORDER - LINE ITEM/RLS
063301 - 1 / 0

WORK ORDER **015982**
HEAT NUMBER **550539**
MELT SOURCE **Benteler Steel & Tube-Germany**

SOLD TO

Earle M. Jorgensen Co.
1900 Mitchell Blvd
Schaumburg, IL 60193
USA

ISO 9001:2000
AND
TS 16949:2002
CERTIFIED

CUSTOMER P.O.	CUSTOMER PART	QUANTITY	LADING NO	SHIPMENT DATE
P250681 001	**100090**			

This test report data is for the heat Chemistry Stated above.

The material in this test report is:

1) **Drawn in the USA**
2) **Free from Polybrominated Biphenyls (PBB), Polybrominated Diphenyl Ethers (PBDE), and Mercury contamination.**
3) **NAFTA compliant.**

End of Certification

I certify that the results are a true and correct copy of the records prepared and maintained by Plymouth Tube Company, Streator in compliance with the requirements of the cited specification. Chemistry is as reported by the Steel supplier. This test report cannot be reproduced or distributed except in full without the written permission of Plymouth Tube.

Mike Danko
Quality Assurance

Date Printed **09/28/2009**

FROM: EARLE M. JORGENSEN (CANADA)INC
6925 8TH STREET NW

EDMONTON

S.I.D. ORDER NO. T150984
ORDERED BY: JEFF CLARKE
PHONE: 403 250-8027
CUST. ORD. NO.: 11049

SOLD TO
AERO DESIGN LIMITED
2013- 39TH AVENUE NORTH EAST
CALGARY
AB T2E 6R7

SHIP TO
AERO DESIGN LIMITED
2013- 39TH AVENUE NORTH EAST
CALGARY
AB T2E 6R7
FAX: 403 2508333
000

PAGE 1 OF 1
M531KPL1
A580657

XFER # 00423
T139415

DATE ORD.	CUSTOMER P.O.	F.O.B.	DEL AREA	VIA	CUST. ACCT.	PROM. DATE
03-MAY-11	11049	DESTIN	CALGARY	OUR TRUCK	230337	31-MAY-11

ORDER WGT.	I/S	TERR.	TYPE	TAX RATE	PPD/COLL	C.O.D.	TEST REPORT	SHIP DATE
83	003 PAUL LOPES		CT		PREPAID	2	0 PRO # Y	01-JUN-11

*** To be INDIRECT SHIPPED from Branch 00423

105088 4130 CDS TUBING AMS T 6736 COND N;
100.00 FT 1 X 1 X .065 W X 17/24' R/L 100.0000 FT
W/FT 0.8265 EXT WGT: 83
PT#105088 JOB/BTCH# 11049

Best Effort
ll sales subject to US Export Administration Regulations.
lease refer to http://www.emjmetals.com/about/Terms.htm
HEAT # 564354 LOCATION:TRANSFER Y
1 BND 5 PC
100 FT

The property described below in apparent good order except as noted (contents and condition of contents unknown) marked, consigned and destined as indicated below, which said carrier, (the word carrier being understood throughout this contract as meaning any person or corporation in possession of the property under the contract) agrees to carry to its usual place of delivery at said destination if on its route, otherwise to deliver to another carrier on the route to said destination it is mutually agreed as to each carrier of all or any of said property over all or any portion of said route to destination and as to each party at any time interested in all or any of said property that every service to be performed hereunder shall be subject to all terms and conditions of the Uniform Domestic Straight Bill of Lading set forth (1) in Official, Southern, Western, and Illinois freight Classification in effect on the date hereof, if this is a rail or rail water shipment, or (2) in the applicable motor carrier classification or tariff if this is a motor carrier shipment.
Shipper hereby certifies that he is familiar with all the terms and conditions of the said bill of lading, including those on the back thereof, set forth in the classification or tariff which governs the transportation of this shipment and the said terms and conditions are hereby agreed to by the shipper and accepted for himself and his assigns.

ECEIVED ABOVE GOODS
N TERMS AND CONDITIONS X
PPEARING ON BACK OF INVOICE

INVOICE AMT.	ADDITIONAL CHARGES	V.A.T. TAX	TAX/AMT.	TOTAL

NO. OF PKGS.	PKG. TYPE	NO. OF PKGS	PKG. TYPE	TOTAL PCS.	DESCRIPTION OF ARTICLES	SHIP WGT.	CLS
1	Ttl			1	I/S PIPE/TUBE <12" 52	83	050
					TOTAL		
				1		83	

PACKING SLIP

FREIGHT CHARGES ARE TO BE PRE-PAID UNLESS THIS BLOCK IS CHECKED. ☐

Subject to Section 7 of conditions, if this shipment is to be delivered to the consignee without recourse on the consignor, the consignor shall sign the following statement. The carrier shall not make delivery of this shipment without payment of freight and all other lawful charges.
(Signature of Consignor)

CARRIER SEND FREIGHT BILL TO:

SHIPPER PER X

C.O.D. AMOUNT

C.O.D. FEE TO BE PAID BY
SHIPPER ☐ CONSIGNEE ☐

CARRIER
AGENT
PER:

Customer: AERO DESIGN LIMITED Ord #: T150984 Part #: 510098 Cust PO#: 11[illegible]9

PLYMOUTH TUBE CO USA®
1209 East 12th Street, Streator, Illinois 61364
Phone: (815) 673-1515 Fax: (815) 672-7343
TRUST YOUR SOURCE! ACCEPT NO SUBSTITUTIONS!

PRODUCT CERTIFICATION

SALES ORDER - LINE ITEM/RLS
084371 - 1 / 0

WORK ORDER 017856
HEAT NUMBER 564354
MELT SOURCE Benteler Steel & Tube-Germany

SOLD TO

Earle M. Jorgensen Co.
1900 Mitchell Blvd
Schaumburg, IL 60193
USA

R 448082

ISO 9001:2000
AND
TS 16949:2002
CERTIFIED

CUSTOMER P.O.	CUSTOMER PART	QUANTITY	LADING NO	CERT DATE
P379256 001	105088			

PART DESCRIPTION SHSQ1000065JEMJ
***** Square OD *****
Side1: 1.0000 Max:1.0100 Min:0.9900
Side2: 1.0000 Max:1.0100 Min:0.9900
Wall: 0.0650 Max:0.0710 Min:0.0590
Length: 19.00/24.00
Spec: Mil-T 6736B Seamless Aircraft
Grade: 4130
Anneal: Cond N

CERTIFICATION REQUIREMENTS
FAR BAA (FAR 52.225-1 Buy America Act Supplies). DFARS 252.225-7001 By America Act & Bal. of Payments Program FAR TAA (FAR 52.225-5 Trade Agreements)(Paragraph 1,3,4,5)This material was Eddy Current tested and conforms to the requirements of ASTM A-450.
The Grain size is determined and reported by the raw material supplier in accordance to ASTM E-112.
This raw material was magnetic particle inspected by the raw material supplier in accordance to AMS 2640J and/or ASTM E-1444, and rated as Frequency, and Severity to AMS 2301, latest revision.
Yield is determined by using the 0.2% offset method.

Chemical Analysis

C	Mn	P	S	Si	Al	Cr	Mo	Ni	Pb	Cu	V	Ti	Sn
.320	.56	.008	.002	.240	.030	.88	.16	.10	.001	.17	.004	.002	.013

Physical Properties

Freq.	Severity	Grain Size
.049	.044	9

Mechanical Properties

TEST	UNITS	#TESTS	HIGH	LOW	AVERAGE	STD-DEV
Tensile	Psi	3	118920	115800	117100	1624
Yield	Psi	3	104800	100810	102383	2124
Elongation	%	3	22	22	22	0
Rockwell B	Rb	3	99	99	99	0
Rockwell C	Rc	0	----------	----------	----------	----------

TEST	RESULT
Decarb/OD	Pass
Total ID/OD decarb	Pass

Additional Specification(s)

AMS-T 6736B, 6360L & 6371J

I certify that the results are a true and correct copy of the records prepared and maintained by Plymouth Tube Company, Streator in compliance with the requirements of the cited specification. Chemistry is as reported by the Steel supplier. This test report cannot be reproduced or distributed except in full without the written permission of Plymouth Tube.

Mike Danko
Quality Assurance

Date Printed 05/19/2011

Customer: AERO DESIGN LIMITED Ord #: T150984 Part #: 510098 Cust PO#: 1[redacted]9

PLYMOUTH TUBE CO USA®
1209 East 12th Street, Streator, Illinois 61364
Phone: (815) 673-1515 Fax: (815) 672-7343
TRUST YOUR SOURCE! ACCEPT NO SUBSTITUTIONS!

PRODUCT CERTIFICATION

SALES ORDER - LINE ITEM/RLS
084371 - 1 / 0

WORK ORDER 017856
HEAT NUMBER 564354
MELT SOURCE Benteler Steel & Tube-Germany

SOLD TO

Earle M. Jorgensen Co.
1900 Mitchell Blvd
Schaumburg, IL 60193
USA

ISO 9001:2000
AND
TS 16949:2002
CERTIFIED

CUSTOMER P.O.	CUSTOMER PART	QUANTITY	LADING NO	CERT DATE
P379256 001	105088			

This test report data is for the heat Chemistry Stated above.

The material in this test report is:

1) **Drawn in the USA**
2) Free from **Polybrominated Biphenyls (PBB), Polybrominated Diphenyl Ethers (PBDE),** and **Mercury** contamination.
3) **NAFTA** compliant.

End of Certification

I certify that the results are a true and correct copy of the records prepared and maintained by Plymouth Tube Company, Streator in compliance with the requirements of the cited specification. Chemistry is as reported by the Steel supplier. This test report cannot be reproduced or distributed except in full without the written permission of Plymouth Tube.

Mike Danko
Quality Assurance

Date Printed 05/19/2011

FROM: EARLE M. JORGENSEN (CANADA)INC
6925 8TH STREET NW

EDMONTON

S.I.D. ORDER NO. T150982
ORDERED BY: JEFF CLARKE
PHONE: 403 250-8027
CUST. ORD. NO.: 11049

SOLD TO
AERO DESIGN LIMITED
2013- 39TH AVENUE NORTH EAST
CALGARY
AB T2E 6R7

SHIP TO
AERO DESIGN LIMITED
2013- 39TH AVENUE NORTH EAST
CALGARY
AB T2E 6R7
FAX: 403 2508333

PAGE 1 OF 1
M67KPL22
A584360

XFER # 00423
000
T139406

DATE ORD.	CUSTOMER P.O.	F.O.B.	DEL AREA	VIA	CUST. ACCT.	PROM. DATE
03-MAY-11	11049	DESTIN	CALGARY	OUR TRUCK	230337	07-JUN-11

ORDER WGT.	I/S	TERR.	TYPE	TAX RATE	PPD/COLL	C.O.D.	TEST REPORT	SHIP DATE
111	003 PAUL LOPE	S	CT		PREPAID	2	0 PRO # Y	08-JUN-11

*** To be INDIRECT SHIPPED from Branch 00423

105076 4130 CDS TUBING AMS T 6736 COND N;
500.00 FT .500 X .500 X .035 W X 17/24' R/L 500.0000 FT
W/FT 0.2213 EXT WGT: 111

PT#105076 JOB/BTCH# 11049

Best Effort
ll sales subject to US Export Administration Regulations.
lease refer to http://www.emjmetals.com/about/Terms.htm
HEAT # 562633 LOCATION:TRANSFER Y
1 BND 25 PC
500 FT

The property described below in apparent good order except noted (contents and condition of contents unknown) marked, consigned and destined as indicated below, which said carrier, (the word carrier being understood throughout this contract as meaning any person or corporation in possession of the property under the contract) agrees to carry to its usual place of delivery at said destination if on its route, otherwise to deliver to another carrier on the route to said destination it is mutually agreed as to each carrier of all or any of said property over all or any portion of said route to destination and as to each party at any time interested in all or any of said property that every service to be performed hereunder shall be subject to all terms and conditions of the Uniform Domestic Straight Bill of Lading set forth (1) in Official, Southern, Western, and Illinois freight Classification in effect on the date hereof, if this is a rail or rail water shipment, or (2) in the applicable motor carrier classification or tariff if this is a motor carrier shipment.
Shipper hereby certifies that he is familiar with all the terms and conditions of the said bill of lading, including those on the back thereof, set forth in the classification or tariff which governs the transportation of this shipment and the said terms and conditions are hereby agreed to by the shipper and accepted for himself and his assigns.

ECEIVED ABOVE GOODS
N TERMS AND CONDITIONS
PPEARING ON BACK OF INVOICE X

INVOICE AMT.	ADDITIONAL CHARGES	V.A.T. TAX	TAX/AMT.	TOTAL

NO. OF PKGS.	PKG. TYPE	NO. OF PKGS	PKG. TYPE	TOTAL PCS.	DESCRIPTION OF ARTICLES	SHIP WGT.	CLS
1	Ttl			1	I/S PIPE/TUBE <12" 52	111	050
PACKING SLIP					TOTAL		
				1		111	

FREIGHT CHARGES ARE TO BE PRE-PAID UNLESS THIS BLOCK IS CHECKED. ☐

Subject to Section 7 of conditions, if this shipment is to be delivered to the consignee without recourse on the consignor, the consignor shall sign the following statement. The carrier shall not make delivery of this shipment without payment of freight and all other lawful charges.
(Signature of Consignor)

CARRIER SEND FREIGHT BILL TO:

SHIPPER PER X

C.O.D. AMOUNT

C.O.D. FEE TO BE PAID BY
SHIPPER ☐ CONSIGNEE ☐

CARRIER
AGENT
PER:

Customer: AERO DESIGN LIMITED Ord[redacted]T150982 Part #: 510098 Cust PO#: 110[redacted]

PLYMOUTH TUBE CO USA®

1209 East 12th Street, Streator, Illinois 61364
Phone: (815) 673-1515 Fax: (815) 672-7343
TRUST YOUR SOURCE! ACCEPT NO SUBSTITUTIONS!

PRODUCT CERTIFICATION

SALES ORDER - LINE ITEM/RLS
083688 - 1 / 0

WORK ORDER 017872
HEAT NUMBER 562633
MELT SOURCE Benteler Steel & Tube-Germany

SOLD TO

Earle M. Jorgensen Co.
1900 Mitchell Blvd
Schaumburg, IL 60193
USA

R ++3078

ISO 9001:2000
AND
TS 16949:2002
CERTIFIED

CUSTOMER P.O.	CUSTOMER PART	QUANTITY	LADING NO	CERT DATE
P376540 423	105076			

PART DESCRIPTION SHSQ0500035J000
***** Square OD *****
Side1: 0.5000 Max:0.5100 Min:0.4900
Side2: 0.5000 Max:0.5100 Min:0.4900
Wall: 0.0350 Max:0.0380 Min:0.0320
Length: 17.00/24.00
Spec: Mil-T 6736B Seamless Aircraft
Grade: 4130
Anneal: Cond N

CERTIFICATION REQUIREMENTS
FAR BAA (FAR 52.225-1 Buy America Act Supplies). DFARS 252.225-7001 By America Act & Bal. of Payments Program FAR TAA (FAR 52.225-5 Trade Agreements)(Paragraph 1,3,4,5)This material was Eddy Current tested and conforms to the requirements of ASTM A-450.
The Grain size is determined and reported by the raw material supplier in accordance to ASTM E-112.
This raw material was magnetic particle inspected by the raw material supplier in accordance to AMS 2640J and/or ASTM E-1444, and rated as Frequency, and Severity to AMS 2301, latest revision.
Yield is determined by using the 0.2% offset method.

Chemical Analysis

C	Mn	P	S	Si	Al	Cr	Mo	Ni	Pb	Cu	V	Ti	Sn
.310	.54	.008	.002	.240	.032	.89	.17	.07	.001	.13	.003	.002	.010

Physical Properties

Freq.	Severity	Grain Size
.020	.015	9

Mechanical Properties

TEST	UNITS	#TESTS	HIGH	LOW	AVERAGE	STD-DEV
Tensile	Psi	3	121140	118120	119390	1566
Yield	Psi	3	106570	104520	105303	1107
Elongation	%	3	17	16	17	1
Rockwell B	Rb	3	96	96	96	0
Rockwell C	Rc		---	---	---	

TEST	RESULT
Decarb/OD	Pass
Total ID/OD decarb	Pass

Additional Specification(s)

AMS-T 6736B, 6360L & 6371J

I certify that the results are a true and correct copy of the records prepared and maintained by Plymouth Tube Company, Streator in compliance with the requirements of the cited specification. Chemistry is as reported by the Steel supplier. This test report cannot be reproduced or distributed except in full without the written permission of Plymouth Tube.

Mike Danko
Quality Assurance

Date Printed 05/12/2011

Customer: AERO DESIGN LIMITED Ord# T150982 Part #: 510098 Cust PO#: 1104

PLYMOUTH TUBE CO USA®
1209 East 12th Street, Streator, Illinois 61364
Phone: (815) 673-1515 Fax: (815) 672-7343
TRUST YOUR SOURCE! ACCEPT NO SUBSTITUTIONS!

PRODUCT CERTIFICATION

SALES ORDER - LINE ITEM/RLS
083688 - 1 / 0

WORK ORDER 017872
HEAT NUMBER 562633
MELT SOURCE **Benteler Steel & Tube-Germany**

SOLD TO

Earle M. Jorgensen Co.
1900 Mitchell Blvd
Schaumburg, IL 60193
USA

ISO 9001:2000
AND
TS 16949:2002
CERTIFIED

CUSTOMER P.O.	CUSTOMER PART	QUANTITY	LADING NO	CERT DATE
P376540 423	105076			

This test report data is for the heat Chemistry Stated above.

The material in this test report is:

1) **Drawn in the USA**
2) Free from **Polybrominated Biphenyls (PBB), Polybrominated Diphenyl Ethers (PBDE),** and **Mercury** contamination.
3) **NAFTA** compliant.

End of Certification

I certify that the results are a true and correct copy of the records prepared and maintained by Plymouth Tube Company, Streator in compliance with the requirements of the cited specification. Chemistry is as reported by the Steel supplier. This test report cannot be reproduced or distributed except in full without the written permission of Plymouth Tube.

Mike Danko
Quality Assurance

Date Printed 05/12/2011

AERO Design Ltd.
2013 - 39th Avenue N.E.
Calgary, Alberta, T2E 6R7
Phone: (403) 250-8027
Fax: (403) 250-8333

Purchase Order

P.O. Number	**11048**
Date	06-May-11

Vendor:	
Name:	Air Liquide
Address:	3004 - 54th Ave. S.E. Calgary, AB T2C 0A7
Phone:	403-291-0100
Fax:	403-291-1129
Attention:	
Currency:	CAD

Ship To:	
Name:	AERO Design Ltd.
Address:	2013 - 39th Avenue N.E. Calgary, Alberta, T2E 6R7
Phone:	(403) 250-8027
Fax:	(403) 250-8333
Attention:	Richard

ITEM	DESCRIPTION	QTY	RATE	AMOUNT
1	ER70S-6 Welding Wire 0.023", 11 lb Spool	1		0.00
2	Argon, Size 50XPR	1		0.00
		Subtotal		0.00
	Sales Tax	GST	5.00%	0.00
		Total	**CAD**	**$0.00**

Document
41758698

Air Liquide Canada
3004 54 AVE SE
CALGARY, AB, T2C 0A7
Phone: 403-777-4700
Fax: 403-777-4727

PO11048

Delivery Note

Customer	Reference
1058384-001	
Ship To	AERO DESIGN LTD, 2013 39TH AVE NE, CALGARY, AB, T2E 6R7
Sold To	AERO DESIGN LTD, 2013 39TH AVE NE, CALGARY, AB, T2E 6R7

Product	Ordered	Shipped	Returned
BLU-38977823 WIRE, SOLID, MILD STEEL, BLUESHIELD, LA S-6, 0.6MM (0.023") X 5KG (11LB) SPOOL, AWS ER70S-6, CSA ER480S-6/ER49S-6	5.00	5.00	
GAS-ARG50X CYLINDER GAS, ARGON, SIZE 50 XPR (15.06 M3), CGA-680 ARGON, COMPRESSED, CLASS 2.2, UN 1006	1	1 15.06 M3	1
Cylinders Total		1	1

Return Policy: ALC will accept returns on unopened / unused standard stocking items within 30 days of purchase, subject to a restocking fee. All non-stocking items or SPX itmes are non returnable

Driver: TREVOR CRAWFORD	Received by: Richard
Delivery Date/Time: 06-May-2011 09:09 (MST)	Signature:

SEE REVERSE FOR TERMS AND CONDITIONS / VOIR AU VERSO LES TERMES ET CONDITIONS

1. Approvisionnement [illegible] gaz et produits de soudage («[illegible]duits») seront livrés par Air Liquide f.à.h. à son installation locale de production et de livraison. Le droit de propriété et tous les risques de perte (ou de dommages) seront transférés à l'acheteur à la livraison. Par la réception du Produit, l'acheteur confirme son acceptation de tous les termes et conditions prévus à ce bon de livraison.

2. Bouteilles. Les bouteilles et toute pièce ou tout accessoire desdites bouteilles sont et demeureront en tout temps la propriété entière et exclusive d'Air Liquide. L'acheteur aura la possession, la garde et le contrôle desdites bouteilles. L'acheteur ne pourra hypothéquer, nantir, prêter, céder ou aliéner les bouteilles, ni créer, souffrir ou permettre aucun privilège, hypothèque ou charge à l'égard des bouteilles et, s'il en existe, il s'en libérera sans délai et en obtiendra quittance. Jusqu'à ce que les bouteilles soient retournées par l'acheteur à Air Liquide, l'acheteur assume par les présentes tous les risques de pertes ou de dommages aux bouteilles ou à toute pièce ou tout accessoire desdites Bouteilles. Lorsque des bouteilles sont perdues ou irréparables, l'acheteur paiera à Air Liquide, sur demande, la pleine valeur de remplacement de ces bouteilles et/ou des pièces ou accessoires, d'après l'évaluation qu'en fera Air Liquide à ce moment-là. L'acheteur ne pourra modifier, régler, réparer ou altérer les bouteilles ou toute pièce ou tout accessoire desdites Bouteilles, ni permettre à un tiers de le faire. L'acheteur convient de ne pas faire remplir les bouteilles d'un produit, gaz, liquide ou toute autre matière par une personne, entreprise ou corporation autre qu'Air Liquide.

3. Limitation de garanties. Si un Produit n'est pas conforme à la garantie standard d'Air Liquide, le seul recours de l'acheteur sera de refuser ledit Produit et de demander à Air Liquide de le remplacer ou le réparer. Air Liquide transférera à l'acheteur toute garantie, assurance ou autre droit reçus avec le Produit des manufacturiers, sous-traitants et autres fournisseurs d'Air Liquide. Le défaut de l'Acheteur de présenter à Air Liquide une réclamation à l'égard du Produit livré en vertu des présentes dans les dix (10) jours de sa réception, constituera de la part de l'Acheteur une renonciation à toute autre réclamation relative audit Produit. Air Liquide ne donne aucune autre garantie de quelque nature que ce soit, expresse ou implicite, y compris mais sans s'y limiter, les garanties tacite relatives à la qualité marchande et l'aptitude à un usage particulier.

4. Limitation de responsabilité. Ni l'une ni l'autre des parties ne sera responsable envers l'autre des dommages spéciaux, indirects ou consécutifs, peu importe la façon dont ils se produisent, incluant mais sans s'y limiter, les pertes de profits et les arrêts de production.

1. Delivery. All gas and welding products ("Product") will be delivered F.O.B. to Air Liquide's local producing and delivery facility. Title and risk of loss or damages will pass to buyer upon delivery. Buyer assumes all risk of loss or damage to the Cylinders or to any part or accessory thereof from cylinders' delivery until cylinders' return to Air Liquide's point of shipment. Acceptance of the Product confirms buyer's acceptance of all the terms and conditions contained in this delivery note.

2. Cylinders. Buyer agrees that the cylinders and any part or accessory thereof are and shall remain the sole property of Air Liquide. Buyer shall have the custody, care and control of the cylinders. Buyer will not allow the cylinders to become subject to any such lien and encumbrance or claim by third party and shall, if any, promptly remove and procure the release of any such lien, encumbrance or claim. For cylinders lost or damaged, buyer agrees to pay Air Liquide, the full replacement value of the cylinders and/or said part or accessory, at Air Liquide's current valuation. Buyer shall not, nor shall buyer allow any third party to alter, adjust, repair or tamper with the cylinders or any part or accessory thereof. Buyer agrees not to have the cylinders recharged with any product, gas, liquid or other material whatsoever by any person, firm or corporation other than Air Liquide.

3. Limitation of warranties. If the Product does not conform to Air Liquide's standard warranty, buyer's sole remedy is to require Air Liquide to replace or repair the Product. Air Liquide will assign to buyer any implied or express warranty, indemnity or other right Air Liquide may have in Product from all manufacturers, subcontractors and other suppliers to Air Liquide. Buyer understands that in order for Air Liquide to be able to properly investigate, buyer must notify Air Liquide of all claims within 10 days after occurrence. Air Liquide makes no other warranty of any kind, express or implied, including without limitation, warranties or merchantability and fitness for a particular purpose.

4. Limitation of responsibility. Regardless of the circumstances, neither party will be liable to the other for special, indirect or consequential damages howsoever occurring, including without limitation, lost of profit and business interruption.

AERO Design Ltd.
2013 - 39th Avenue N.E.
Calgary, Alberta, T2E 6R7
Phone: (403) 250-8027
Fax: (403) 250-8333

Purchase Order

P.O. Number	**11047**
Date	28-Apr-11

Vendor:

Name: Thyssen Krupp
Address: 19044 - 95A Avenue
Surrey BC V4N 4P2
Phone: 604-822-3493 ext. 14020
Fax: 800-926-2600
Attention: Timothy Skidmore
Currency: CAD

Ship To:

Name: AERO Design Ltd.
Address: 2013 - 39th Avenue N.E.
Calgary, Alberta, T2E 6R7
Phone: (403) 250-8027
Fax: (403) 250-8333
Attention: Jeff Clarke

ITEM	DESCRIPTION	QTY	RATE	AMOUNT
1	6061-T6 Aluminum Extruded Bar 3.0 x 1.0 x 144	2	95.25	190.50
	6061-T6 Aluminum Extruded Bar 3.5 x 1.0 x 144	2	111.15	222.30
	Fuel Surcharge	2	8.11	16.22
		Subtotal		429.02
	Sales Tax	GST	5.00%	21.45
		Total	**CAD**	**$450.47**

ThyssenKrupp Materials NA
Copper and Brass Sales Division

ThyssenKrupp

QUOTE

ThyssenKrupp Materials NA, 19044 95A Avenue, Surrey, BC V4N 4P2

AERO DESIGN LTD.
2013 39 AVE NE
CALGARY AB T2E 6R7
Canada

TEL: 403-250-8027
FAX: 403-250-8333

DATE: 04/28/2011
QUOTE NO: 1200305823
YOUR INQUIRY:
ATTENTION TO: Steven Fahey
TEL: 403-250-8027
CUSTOMER NO: 10016771
DEPARTMENT: CAN VAN INS 01
CONTACT: Timothy Skidmore
TEL: 800-926-2600
FAX: 888-926-2600
EMAIL: timothy.skidmore@thyssenkrupp.com

Thank you for allowing us to quote on your requirement. Delivery contingent upon date ordered.

Delivery Address
AERO DESIGN LTD., 2013 39 AVE NE, CALGARY, AB T2E 6R7, CANADA
Unloading Point: Unload Point 1

Earliest Delivery Date: **05/02/2011**

ITEM	DESCRIPTION	QTY1 UOM QTY2 UOM QTY3 UOM	PRICE CUR PER UOP	TOTAL CAD
0010	ALREC00249 6061 - T6511 Aluminum Extruded Rectangular 1.00000 (+-.012) X 3.5000 (+-.024) X 144 Mill Length ASTM B 221|2008 ROHS COMPLIANT SAE AMS-QQ-A-200/8|1997 Nominal Chemistry/Act Physical Standard Packaging	**2 PC** **98.784 LB**	**111.15 CAD** **1 PC**	**222.30**
	Energy Surcharge			8.11
	Item total:			**230.41**
0020	ALREC00290 6061 - T6511 Aluminum Extruded Rectangular 1.00000 (+-.012) X 3.0000 (+-.024) X 144 Mill Length ASTM B 221|2008 ROHS COMPLIANT SAE AMS-QQ-A-200/8|1997 Nominal Chemistry/Act Physical Standard Packaging	**2 PC** **84.672 LB**	**95.25 CAD** **1 PC**	**190.50**
	Energy Surcharge			8.11
	Item total:			**198.61**

ThyssenKrupp Materials NA
Copper and Brass Sales Division

ThyssenKrupp

ThyssenKrupp Materials NA, 19044 95A Avenue, Surrey, BC, V4N 4P2

AERO DESIGN LTD.
2013 39 AVE NE
CALGARY AB T2E 6R7
Canada

QUOTE

DATE: 04/28/2011
QUOTE NO: 1200305823
YOUR INQUIRY:
ATTENTION TO: Steven Fahey
TEL: 403-250-8027

Weight total	183.456 LB	
Items total		429.02
Net Amount		**429.02**
GST		21.45
TOTAL		**450.47**

Payment Terms: Within 30 days without deduction
Delivery Terms: PPD Prepaid Prepaid
Shipping Condition: General Delivery

COMPUTER GENERATED OFFER AND VALID WITHOUT SIGNATURE.

Please review the above items for accuracy.
Prices are quoted as price in effect at time of shipment.
Our standard terms and conditions apply should this quote become an order.
For terms and conditions please refer to website at **www.copperandbrass.com**
Any obvious damage must be noted on the material delivery documentation at the time of receipt.
Tax exemption status documentation must be forwarded to credit department prior to order approval.
All returned material subject to restock charge

ThyssenKrupp Materials NA
Copper and Brass Sales Division

ThyssenKrupp

ThyssenKrupp Materials NA,19044 95A Avenue, Surrey, BC V4N 4P2

DELIVERY NOTE
COPY

AERO DESIGN LTD.
2013 39 AVE NE
CALGARY AB T2E 6R7

DATE:	05/02/2011
DOC. NO:	2401242188*
ORDER NO:	1400803330
YOUR P/O:	11047
LOADING NO:	3510057260
CUSTOMER NO:	10016771
Route:	**B8MB9**
CONTACT:	Timothy Skidmore
TEL:	800-926-2600
FAX:	888-926-2600
EMAIL:	timothy.skidmore@thyssenkrupp.com

SHIP TO: 2013-39TH AVENUE N.E.
SHIP TO: CALGARY, AB, T2E 6R7

We deliver at your own risk and account in accordance with our general delivery and payment terms.

ITEM	DESCRIPTION	NET QTY1 / QTY2	PACKAGE NO
0010	ALREC00249 6061 - T6511 Aluminum Extruded Rectangular 1.00000 (+-.012) X 3.5000 (+-.024) X 144 Mill Length ASTM B 221|2008 ROHS COMPLIANT SAE AMS-QQ-A-200/8|1997 Nominal Chemistry/Act Physical Standard Packaging Customer Order No: 11047	2 PC 100.182 lb	1001673655
	Tag Qty UOM Vendor Vend PO Heat/Lot PCS 1001636161 2 PC SAPA EXTRU 5400098233 20627415 2		
0020	ALREC00290 6061 - T6511 Aluminum Extruded Rectangular 1.00000 (+-.012) X 3.0000 (+-.024) X 144 Mill Length ASTM B 221|2008 ROHS COMPLIANT SAE AMS-QQ-A-200/8|1997 Nominal Chemistry/Act Physical Standard Packaging Customer Order No: 11047	2 PC 86 lb	1001673655
	Tag Qty UOM Vendor Vend PO Heat/Lot PCS 1001648825 2 PC SAPA EXTRU 5400099002 20701693 2		
	Total Gross Weight	**188.182 lb**	

All items, not declared as partial delivery, are final quantities.
Delivery Terms: PPD gem. Incoterms 2000 Prepaid

ThyssenKrupp Materials NA
Copper and Brass Sales Division

ThyssenKrupp

ThyssenKrupp Materials NA,19044 95A Avenue, Surrey, BC V4N 4P2

DELIVERY NOTE COPY

AERO DESIGN LTD.
2013 39 AVE NE
CALGARY AB T2E 6R7

DATE:	05/02/2011
DOC. NO:	2401242188*
ORDER NO:	1400803330
YOUR P/O:	11047
LOADING NO:	3510057260
CUSTOMER NO:	10016771
Route:	**B8MB9**
CONTACT:	Timothy Skidmore
TEL:	800-926-2600
FAX:	888-926-2600
EMAIL:	timothy.skidmore@thyssenkrupp.com

CERTIFICATION OF COMPLIANCE

We hereby certify that mercury or any of its compounds are not used in the processing and distribution of our products. The products we distribute are not hazardous in their received state.

For MSDS sheets go to www.copperandbrass.com/msds or call 248-233-5862. We hereby certify that the material above complies with the above specifications

Rush D. Williams - Director Quality Improvement Board

Rush D. Williams

sapa:

Sapa Industrial Extrusions
1550 KIRBY LANE
--
SPANISH FORK, UT
84660

Sapa Extrusions Inc., a Subsidiary of Sapa AB

Certified Inspection Report

Cert Number	Page
SAPA365117	Page 1 of 2

Sales Order Number	Line No.	Customer P/O	Cert Creation Date	Cert Print Date
1100309866	1	5400098233-1	20-MAR-11	20-MAR-11

Invoice To Customer

THYSSENKRUPP MATERIALS CA LTD
COPPER & BRASS SALES
ACCOUNTS PAYABLE
P.O. BOX 5116
SOUTHFIELD, MI - 48086-5116

Ship To Customer

THYSSENKRUPP MATERIALS CA LTD
COPPER & BRASS SALES CANADA
19044 95A AVE
--
SURREY, BC - V4N 4P2

Quantity Shipped	Date Shipped	Item Description	Specification
1102 LB	20-MAR-11	Extruded ACCU-BAR 1.000 TK x 3.500 W TK TOL +.012/-.000 W TOL +.012/-.000 SECT 555225 144.000 IN LN FIN M-MILL W/F 4.155 F 2 CS 3.65 6061/T6511H Marking CONTINUOUS;	ASTMB221 REV 08 IS-AUB REV AMS-QQ-A-200/8 REV Meets 6061-T6511H, 6061-T6511 REV
B/L	**Item No.**		
210900	G03289613		
Delivery Id	**Item No. Rev**		
4191317	--		
CustomerPart No.			
ALREC00249			

Applicable Specifications, Revisions and Exceptions

ACC-U-ROD

COMPOSITION NOTE: The values for 'Others Each' and 'Others Total' have met the limits as shown on this certified inspection report. Remainder is Aluminum.

Legal Statement

We hereby certify that, unless otherwise indicated, the material covered by this report has been manufactured, inspected, and tested in accordance with, and has been found to meet, the applicable requirements described herein, including any specifications forming a part of the description and that samples representative of the material met the composition and had the mechanical properties shown on the face of this certification. Also, note that mercury is not a normal contaminant in aluminum alloys and neither it nor any of its compounds are used in the manufacture of our product. This certification is not to be reproduced in partial form without prior written approval of our Quality Assurance Dept.

Signature And Title

D. Wade Bishop

Wade Bishop — 20-MAR-11
Quality Control Manager

Copper & Brass Sales
Customer: _____
Customer PO: _____
Qty: ____ Weight: _____
Ship/Delv#: _____
By: _____

Quantities per Lot / Packages

Package Number	Lot Number	Quantity	UOM	Weight	
				Gross	Net
G14-PKG1155860	20627415	11	PCS	557	551
G14-PKG1155861	20627415	11	PCS	557	551

Composition Limits

Alloy	Si		Fe		Cu		Mn		Mg		Cr		Zn	
	Min	Max	Min	Max	Min	Max	Min	Max	Min	Max	Min	Max	Min	Max
6061	0.40	0.80	---	0.70	0.15	0.40	---	0.15	0.80	1.20	0.04	0.35	---	0.25

sapa:

Sapa Industrial Extrusions
1550 KIRBY LANE
--
SPANISH FORK, UT
84660

Certified Inspection Report

Cert Number	Page
SAPA365117	Page 2 of 2

Sales Order Number	Line No.	Customer P/O	Cert Creation Date	Cert Print Date
1100309866	1	5400098233-1	20-MAR-11	20-MAR-11

Alloy	Ti		Others Each		Others Total	
	Min	Max	Min	Max	Min	Max
6061	---	0.15	---	0.05	---	0.15

Composition Results

Heat / Cast	Si	Fe	Cu	Mn	Mg	Cr	Zn	Ti	Others Each	Others Total
S10102502	0.69	0.39	0.31	0.08	0.95	0.08	0.07	0.03	--	--
Heat / Cast	Si	Fe	Cu	Mn	Mg	Cr	Zn	Ti	Others Each	Others Total
S10110408	0.74	0.44	0.32	0.09	0.94	0.09	0.08	0.03	--	--

Mechanical Property - Test Limits

		Test Type	UTS - L		TYS - L		EL 4D-Long	
		UOM	KSI		KSI		PCT	
		# of Test	--		--		--	
Test Temper	Lot Number	# of Tests	MIN Value	MAX Value	MIN Value	MAX Value	MIN Value	MAX Value
T6511H	20627415	2	44.0	44.9	39.5	41.1	15.0	15.5

Cert Notes

Material manufactured to T6511 specifications also meets T6 requirements.

All elements are represented in the chemical analysis section. The remainder is Aluminum.

All alloys produced at Sapa Industrial Extrusions comply with 0.4% maximum lead per RoHS, with the exception of 6262 alloy

In accordance with EN 10204, Test Report Type 2.2 and Certificate Type 3.1

Material produced in compliance to EN 10204 3.1

Melted and Manufactured in the USA

Made in USA

AERO Design Ltd.
2013 - 39th Avenue N.E.
Calgary, Alberta, T2E 6R7
Phone: (403) 250-8027
Fax: (403) 250-8333

Purchase Order

P.O. Number	**11045**
Date	19-Apr-11

Vendor:	
Name:	Leavens Aviation Inc.
Address:	2555 Derry Rd. East Mississauga, Ontario L4T 1A1
Phone:	905-678-1234
Fax:	905-678-7028
Attention:	Sue
Currency:	CAD

Ship To:	
Name:	AERO Design Ltd.
Address:	2013 - 39th Avenue N.E. Calgary, Alberta, T2E 6R7
Phone:	(403) 250-8027
Fax:	(403) 250-8333
Attention:	Jeff Clarke

ITEM	DESCRIPTION	QTY	RATE	AMOUNT
1	AN525-832R12 Screw	50	0.50	25.00
	Shipping	1	25.00	25.00
		Subtotal		50.00
	Sales Tax	GST	5.00%	2.50
		Total	**CAD**	**$52.50**

leavens aviation inc.

LEAVENS AVIATION
"SINCE 1927"
"DEPUIS 1927"

HEAD OFFICE /SIÈGE SOCIAL
2555 DERRY RD. E.
MISSISSAUGA, ON L4T 1A1
TEL: 905-678-1234 FAX: 905-678-7028
ORDER LINE/LIGNE DIRECTE: 1-800-263-6142

BRANCH / SUCCURSALE
#12 - 2221 - 41st AVENUE N.E.
CALGARY, ALBERTA T2E 6P2
TEL: 403-735-4996 FAX: 403-735-4998
ORDER LINE/LIGNE DIRECTE: 1-800-661-6426

TORONTO

CAADMO

ADMA INTERNATIONAL

PAGE 1

SOLD TO:
VENDU À : 2-0397
AERO DESIGN
2013-39 AVE N.E.
CALGARY,
ALTA.
T2E 6R7

403-250-8027

SHIPPED TO:
EXPÉDIER À :

P.S.T. NO. / T.V.P.	CREDIT STATUS	SHIPPED VIA / EXPÉDIER VIA	DATE SHIPPED/DATE DE L'ENVOI	WAYBILL NO.	CHARGES FRAIS DE TRANSPORT
	O	PURO	Apr. 19	6001052213852	$ 25.00

DATE ENTERED / INSCRIRE	CUSTOMER'S REFERENCE NO. / N° DE RÉFÉRENCE DU CLIENT	ORDER NO./N° COMM.	SHIPPER NO./N° DE L'EXP.	PACKED BY/EMBALLÉ PAR	COLLECT À PERCEVOIR / PREPAID & CHARGE FACTURÉ ET PAYÉ D'AVANCE
18 APR 11	11045 SUE	5013548	5038180	Emily	☐ / ☑

ITEM ARTICLE	QTY. ORDERED QUANTITÉ COMMANDÉE	CODE	DESCRIPTION	BACK ORDERED QUANTITÉ À SUIVRE	QTY. SHIPPED QTÉ. EXPÉDIÉE	UNIT UNITÉS	PRICE PER UNIT PRIX DE VENTE	DISC. RABAIS %		R S
1	50	ANH	AN525-832R12 SCREW K3112A	/	50	EA	.50	N		C
			SHIPPING INSTRUCTIONS : PO REQUIRED ON ALL ORDERS							

DoT RELEASE CERTIFICATE — APPROVED INSPECTOR / INSPECTEUR APPROUVÉ

DATE 4/19/11 SIGNED / SIGNÉ

I HEREBY CERTIFY THAT THE AIRCRAFT PARTS DESCRIBED HEREON WERE ACQUIRED FROM A SOURCE OF SUPPLY THAT IS CONSISTENT WITH THE CONDITIONS UNDER WHICH DoT DISTRIBUTOR APPROVAL NO. 2-72 HAS BEEN GRANTED.
JE CERTIFIE PAR LES PRÉSENTES QUE LES PIÈCES, APPAREILLAGES OU MATÉRIAUX DÉCRITS CI-DESSUS PROVIENNENT D'UNE SOURCE D'APPROVISIONNEMENT CONFORME AUX CONDITIONS SOUS RÉSERVE DESQUELLES LE CERTIFICAT D'AGRÉMENT DE DISTRIBUTION N° 2-72 DU MINISTRÈRE DES TRANSPORTS À ÉTÉ DÉLIVRÉ.

CERTIFICATE OF CONFORMANCE — APPROVED INSPECTOR / INSPECTEUR APPROUVÉ

DATE _____ SIGNED / SIGNÉ _____

SELLER CERTIFIES THAT, THE ARTICLES FURNISHED IN THE QUANTITIES INDICATED MEET APPLICABLE SPECIFICATIONS IN ACCORDANCE WITH THE VENDOR'S PURCHASE ORDER.
LE VENDEUR CERTIFIE QUE LES ARTICLES FOURNIS DANS LES QUANTITÉS INDIQUÉES RENCONTRENT LES SPÉCIFICATIONS APPLICABLES EN ACCORD AVEC LE BON DE COMMANDE.

MAINTENANCE RELEASE / ENTRETIEN COMPLÉTÉ : — APPROVED INSPECTOR / INSPECTEUR APPROUVÉ

DATE: _____ SIGNED: / SIGNÉ : _____

THE MAINTENANCE DESCRIBED ABOVE HAS BEEN PERFORMED IN ACCORDANCE WITH THE APPLICABLE STANDARDS OF AIRWORTHINESS. / L'ENTRETIEN DÉCRIT CI-HAUT A ÉTÉ EXÉCITÉ EN ACCORD AVEC LES NORMES APPLICABLES À LA NAVIGATION.

NOTE: ITEMS WHICH ARE SHOWN WITH AN "X" BATCH NUMBER ARE NOT COVERED BY THIS DoT RELEASE CERTIFICATE OR CERTIFICATE OF CONFORMANCE. **REMARQUE:** LES ARTICLES AFFICHANT LE NUMÉRO DE LOT "X" NE SONT PAS COUVERTS PAR CE CERTIFICAT DE CONFORMITÉ OU CERTIFICAT DE DÉCHARGE DoT.

TERMS AND CONDITIONS OF SALE - DISTRIBUTION DIVISION

Unless otherwise specifically agreed in writing signed by an authorized employee of Leavens, the following terms and conditions of sale shall apply resulting from Leavens' acceptance of Buyer's order. Any different or additional terms and conditions proposed by Buyer in its purchase order or otherwise are objected to by Leavens. Buyer's assent to the terms and conditions of sale set forth herein shall be conclusively presumed from Buyer's failure reasonably to object thereto in writing and from Buyer's acceptance of all or part of the products ordered. These terms and conditions of sale represent the entire sales agreement of the parties and all proposals, negotiations or agreements made or entered into prior to or contemporaneously with this sales agreement, whether verbal or written are excluded.

1. PRICES. All quotations are made for immediate acceptance and are subject to change without notice. Prices are F.O.B. Leavens, point of shipment unless otherwise specified and are subject to change without notice. Prices are stated in Canadian Dollars and are exclusive of sales, use, excise or similar taxes and are subject to any price adjustment necessitated by Leavens' compliance with any act of government. Any tax or other governmental charge upon the production, sale, shipment or use of the product which Leavens is required to pay or collect from Buyer shall be paid by Buyer to Leavens unless Buyer furnishes Leavens with a tax exemption certificate acceptable to the appropriate taxing authority. Such changes as may occur in tariffs, freight rates or transportation charges used in determining delivered prices after sale and on or prior to dates of shipment will be for the account of Buyer.

2. PAYMENT. Unless credit terms have been extended to Buyer in writing by Leavens' Director of Credit and Collections, or unless other credit terms are included in delivery documents for the products, payment terms are net 30 days in Canadian currency. Leavens reserves the right to modify or withdraw credit terms at any time without notice and to require guarantees, security, or payment in advance of the amount of credit involved. If Buyer fails to fulfill the terms of payment, Leavens may defer further shipment to Buyer or, at its option, cancel the unshipped portion of Buyer's order. Buyer agrees to pay interest on all past due invoices at the highest contractual rate allowable under the laws of Canada.

3. TERMS OF SHIPMENT, ACCEPTANCE. Leavens will ship in accordance with instructions supplied by Buyer, but if Buyer fails to furnish such instructions, Leavens will select what is, in its opinion, the most satisfactory routing for shipment. If Buyer is to pick up products and has not done so within seven (7) days after notification that they are ready for shipment, Leavens may ship the products commercial carrier (best way). Title to and risk of loss for the products pass to Buyer upon delivery to carrier. Any prepayment by Leavens of the freight charges shall be as stated in the delivery documents for the products. By accepting products from the carrier, Buyer agrees that they are free of defects which a reasonably careful inspection would disclose. End items and/or spare parts shall be packed and packaged in accordance with best commercial practices for one way shipment by air and/or surface transportation.

4. DATE OF SHIPMENT. Shipping dates are given to the best of Leavens' knowledge based upon conditions existing at the time the order is placed and information furnished by Buyer. Leavens will, in good faith, endeavor to ship by the estimated shipping date but shall not be responsible for any delay or any damage arising therefrom.

5. CANCELLATION OF ORDER BY BUYER, RETURN OF PRODUCTS FOR CREDIT. Buyer's order may not be modified or rescinded except in writing signed by Leavens and Buyer. If all or part of Buyer's order is terminated by such modification or recision, Buyer, in the absence of a contrary written agreement between Leavens and Buyer, shall pay termination charges based upon cost determined by accepted accounting principles plus a reasonable profit. In any circumstances, Leavens' written consent must be given in advance of Buyer's return of products for credit.

6. FORCE MAJEURE. Leavens shall not be liable for any failure to perform its obligations under this sales agreement resulting directly or indirectly from or contributed to by any acts of God, acts of Buyer, acts of civil or military authority, priorities, fire, strikes or other labour disputes, accidents, floods, epidemics, war, riot, delays in transportation, lack of or inability to obtain raw materials, components, labor, fuel or supplies, or other circumstances beyond Leavens' reasonable control. All sales shall be subject to the export and munitions control laws of Canada. Buyer shall not make any dispositions, re-export or diversion of Canadian origin products purchased from Leavens except as said laws may expressly permit.

7. DISCLAMER OF PRODUCTS WARRANTY. Buyer acknowledges that it is purchasing products from Leavens in Leavens' capacity as a distributor of such products for the manufacturers of such products and that Leavens MAKES NO WARRANTIES WHETHER EXPRESS, IMPLIED OR STATUTORY, INCLUDING, BUT NOT BY WAY OF LIMITATION, ANY WARRANTY OF MERCHANTABILITY OR FITNESS FOR ANY PARTICULAR PURPOSE CONCERNING SUCH PRODUCTS.

8. EXCLUSIVITY OF REMEDY, LIMITATIONS OF LIABILITY. In the event Buyer claims that Leavens has breached any of its obligations under this sales agreement, whether of warranty or otherwise, Leavens may request the return of the products and tender to the Buyer the purchase price therefore paid by Buyer and, in such event, Leavens shall have no further obligation under the sales agreement except to refund such purchase price upon redelivery of the products. If Leavens so requests the return of the products, the products shall be redelivered to Leavens in accordance with Leavens' instructions at Leavens' expense. THE REMEDIES PROVIDED FOR IN THIS PARAGRAPH SHALL CONSTITUTE THE SOLE RECOURSE OF BUYER AGAINST LEAVENS FOR BREACH OF ANY OF LEAVENS' OBLIGATIONS UNDER THE SALES AGREEMENT WITH BUYER, WHETHER THE CLAIM IS MADE IN TORT OR IN CONTRACT, INCLUDING CLAIMS BASED ON WARRANTY, NEGLIGENCE OR OTHERWISE. IN NO EVENT SHALL LEAVENS BE LIABLE FOR INCIDENTAL OR CONSEQUENTIAL DAMAGES NOR SHALL LEAVENS' LIABILITY FOR ANY CLAIMS OR DAMAGE ARISING OUT OF OR CONNECTED WITH THIS SALES AGREEMENT OR THE MANUFACTURE, SALE, DELIVERY OR USE OF THE PRODUCTS EXCEED THE PURCHASE PRICE OF THE PRODUCT.

TERMES ET CONDITIONS DE VENTE - DIVISION DE LA DISTRIBUTION

A moins d'en être autrement spécifiquement convenu par écrit signé par un employe autorisé d'Leavens, les termes et conditions de vente seront appliques résultant de l'acceptation par Leavens de la commande de l'Acheteur. N'importe quels termes et conditions différents ou additionels proposés par l'Acheteur dans son bon de commande ou ailleurs sont opposes par le consentement de l'Acheteur aux termes et conditions de vente établis ci-après, et seront présumés d'une maniere concluante par le manquement de la part de l'Acheteur de faire raisonnablement objection par écrit, et par l'acceptation de l'Acheteur de la partie ou du total des produits commandes. Ces termes et conditions de vente representent l'accord total des parties, et toutes propositions, representations ou ententes faites ou commencées avant ou au moment de cet accord de vente, que ce soit verbalement ou par écrit, son exclues.

1. PRIX - Toutes les cotations sont faites en vue d'acceptation immediate et sont sujettes à changement sans avis. Les prix sont F.A.B. point d'expédition d'Leavens à moins d'en être specifié autrement, et sont sujets à changement sans avis. Les prix sont mentionnes en dollars canadiens, sont exclusifs de taxes de vente, d'usage, d'impôt indirect ou de taxes similares et sont sujets à tout ajustement necessité par Leavens pour être en conformite avec tout décrét du gouvernement. Toute taxe ou autre frais gouvernemental sur la production, la vente, l'expédition ou l'usage du produit qu'Leavens est requis de payer ou de percevoir de l'Acheteur sera payée à Leavens par l'Acheteur à moins que l'Acheteur ne fournisse à Leavens un certificat d'exemption de taxe acceptable par l'Autorité de taxation appropriée. Changements tels que ceux qui peuvent survenir dans les tarifs, taux de chargement et frais de transport, utilises pour déterminer les prix délivrés après vente et au moment ou seront les dates d'expédition, seront au compte de l'Acheteur.

2. PAIEMENT - A moins que des termes de crédit aient été accordés par écrit à l'Acheteur par le Directeur du credit et de l'encaissement d'Leavens, ou à moins que d'autres termes de crédit soient inclus dans les documents de livraison des produits, les conditions de paiement sont net à 30 jours en dollars canadiens. Leavens se réserve le droit de modifier ou de retirer les termes de crédit à n'importe quel moment sans avis, et de demander des garanties, sécurité ou paiement d'avance du montant du crédit en question. Si l'Acheteur manque de remplir les conditions de paiement, Leavens peut déférer les expéditions suivantes à l'Acheteur ou, à son choix, annuler la portion de la commande de l'Acheteur restant à expédier. L'Acheteur consent à payer des intérêts sur toutes les factures impayées au plus haut taux conventionnel accordable sous la loi du Canada.

3. CONDITIONS D'EXPEDITIONM, ACCEPTATION - Leavens expédiera en accord avec les instructions données par l'Acheteur, mais si l'Acheteur manque de fournir de telles instructions, Leavens sélectionnera ce qui, dans son opinion, est l'itinéraire le plus satisfaisant pour l'expédition. Si l'Acheteur doit ramasser les produits et ne l'a pas fait dans les sept (7) jours après l'avis qu'ils sont prêts pour l'expédition Leavens peut expédier les produits par service commercial (meilleure façon). Le titre aux produits et le risque de perte sont passés à l'Acheteur un moment de la livraison à l'expéditeur. Tout paiement à l'avance de frais de chargement seront mentionnés dans les documents de livraison des produits. En acceptant les produits de l'expédition, l'Acheteur reconnait qu'ils sont libres de défauts qu'une inspection raisonnablement attentive pourrait decouvrir. Les articles finis et ou de rechange seront emballés et empaquetés en accord avec les usages commerciaux les meilleurs pour une expédition par air et/ou transport de terre.

4. DATE D'EXPEDITION - Les dates d'expédition sont données par Leavens au mieux de leur connaissance, basé sur les conditions en vigueur au moment où la commande est faite et les informations sont fournies par l'Acheteur. Leavens, en bonne foi, s'efforcera d'expédier à la date d'expédition prévue mais ne sera responsable d'aucun délai ou d'aucun dommage survenant de là.

5. ANNULATION DE L'COMMANDE PAR L'ACHETEUR, RETOUR DES PRODUITS POUR CREDIT - La commandé de l'Acheteur ne peut pas être modifiée ou révoquée autrement que par écrit, signé par Leavens et l'Acheteur. Si la commande de l'Acheteur est terminée en tout en partie par une telle modification ou révocation, l'Acheteur, dans l'absence d'un accord contraire écrit entre Leavens et l'Acheteur, Paiera les frais de révocation basés sur le coût détérmine par les principes de comptabilité acceptés plus un profit raisonnable. En toute circonstance, le consentement écrit d'Leavens doit être donné à l'avance avant le retour des produits par l'Acheteur en vue de crédit.

6. FORCE MAJEURE - Leavens ne sera pas tenu responsable de manquer à ses obligations sous les termes de ce contrat de vente résultant directement ou indirectement ou contribué par n'importe quels actes Divins, actes de l'Acheteur, actes d'autorités civiles ou militaires, priorités, feu, grèves ou autres disputes ouvrières, accidents, inondation, épidémies, guerre, emeutes, délais de transport, manque ou incapacité d'obtenir des matières premières, composants, main-d'oeuvre, essence ou approvisionnement, ou autres circonstances hors du contrôle raisonnable d'Leavens. Toutes ventes seront sujettes au contrôle d'exportation et de munition du Canada. L'Acheteur ne fera aucune disposition, re-exportation ou diversion de produits d'origine canadienne achetés à Leavens à l'exception de ce que la loi mentionnée peut permettre expressément.

7. DENEGATION DE GARANTIE - L'Acheteur reconnait qu'il achète des produits d'Leavens dans la capacité d'Leavens en tant que distributeur de ces produits pour les fabricants de ces produits et qu'Leavens NE DONNE AUCUNE GARANTIE, QUELLE SOIT EXPRESSE, IMPLIQUEE OU STATUTAIRE, INCLUANT, MAIS NON PAR LIMITATION, N'IMPORTE QUELLE GARANTIE DE NEGOTIABILITE OU DE COVENANCE DANS N'IMPORTE QUEL BUT CONCERNANT CES PRODUITS.

8. EXCLUSION DE RECOURS; RESTRICTION DE RESPONSABILITE - Dans le cas ou l'Acheteur déclare qu'Leavens a manqué à ses obligations dans les termes de cet accord de vente, que ce soit en garantie ou autrement, Leavens peut demander le retour des produits et soumettre à l'Acheteur le prix d'achat payé par l'Acheteur en conséquence et, en ce cas, Leavens n'aura aucune obligation supplémentaire sous l'accord de vente à l'exception du remboursement de ce prix d'achat à la réception de ces produits. Si Leavens demande ainsi le retour de ces produits, les produits seront re-livrés à Leavens en accord avec les instructions d'Leavens aux frais d'Leavens. LES RECOURS DONT IL EST FAIT PROVISION DANS CE PARAGRAPHE CONSTITUERONT LE SEUL RECOURS DE L'ACHETEUR CONTRE LEAVENS POUR MANQUER AUX OBLIGATIONS QU'LEAVENS A SOUS LES TERMES DE L'ACCORD DE VENTE AVEC L'ACHETEUR, QUE LA PLAINTE SOIT FAITE EN ACTE DOMMAGEABLE OU EN CONTRAT, INCLUANT LES PLAINTES BASEES SUR LA GARANTIE, NEGLIGENCE OU AUTREMENT EN AUCUN CAS LEAVENS NE SERA TENU RESPONSABLE POUR LES DOMMAGES FORTUITS OU INDIRECTS. NI SA N'EXCEDERA-T-ELLE LE PRIX D'ACHAT DU PRODUIT.

AERO Design Ltd.
2013 - 39th Avenue N.E.
Calgary, Alberta, T2E 6R7
Phone: (403) 250-8027
Fax: (403) 250-8333

Purchase Order

P.O. Number	**11044**
Date	19-Apr-11

Vendor:	
Name:	API
Address:	Suite 550 - 575 Palmer Road N.E. Calgary, Alberta T2E 7G4
Phone:	403-250-9383
Fax:	403-250-8186
Attention:	Megan
Currency:	CAD

Ship To:	
Name:	AERO Design Ltd.
Address:	2013 - 39th Avenue N.E. Calgary, Alberta, T2E 6R7
Phone:	(403) 250-8027
Fax:	(403) 250-8333
Attention:	Jeff Clarke

ITEM	DESCRIPTION	QTY	RATE	AMOUNT
1	MS24693-S25 Screw (100 pk)	1	8.50	8.50
2	MS27039-0808 Screw (100 pk)	1	13.09	13.09
3	AN5-20A Bolt (4 pk)	13	2.25	29.25
4	AN6-15A Bolt (4 pk)	3	3.03	9.09
		Subtotal		59.93
	Sales Tax	GST	5.00%	3.00
		Total	**CAD**	**$62.93**

PRODUCT WANT LIST

API AEROSPACE PRODUCTS INTERNATIONAL

www.apiparts.com

Circle One: Quote Order

Asia 63-45-599-5490
Calgary 888-322-8281
Montreal 800-214-7404
Memphis 800-950-0111
Chicago 866-302-9274

Company AERO DESIGN LTD.

Phone 403 250 8007 Fax 403 250 8333 Date 30 MAR 2011

P.O. # 11044 Contact JEFF CLARKE

No.	Quantity	Part Number	Description	Price	Availibility
1.	1 Pack	M$24693-$25	Screw 8.50/100 pk 2-3 week		
2.	"	M$27039-0808	Screw 13.09/100 pk Stk Memphis		order
3.	~~"~~	~~AN525-8R12~~	~~Screw~~ → 0.15/ea 2-3 weeks.		
4.	~~"~~	~~M$24694-$125~~	~~Screw~~		
5.	50	AN5-20A	Bolt 2.25/4pk Memphis		order
6.	~~10~~ 12	AN6-15A	Bolt 3.03/4pk Memphis		order
7.					
8.					
9.					
10.					

FAX

Asia 63-45-599-5464
Calgary 888-322-8285
Montreal 800-214-8875
Memphis 800-950-1411
Chicago 630-584-8037

API Technologies
GOODYEAR #1 in Aircraft Tires
PRECISION AIRMOTIVE CORPORATION
CHAMPION AEROSPACE
Gill The Original Equipment Aircraft Battery

PRODUCT WANT LIST

API Aerospace Products

www.apiparts.com

Asia	63-45-599-5490
Calgary	888-322-8281
Montreal	800-214-7404
Memphis	800-950-0111
Chicago	866-302-9274

Circle One: Quote Order

Company AERO DESIGN LTD.

Phone 403 250 8027 Fax 403 250 8333 Date 30 MAR 2011

P.O.# 11044 Contact JEFF CLARKE

No	Quantity	Part Number	Description	Price	Availability
1.	1 Pack	MS24693-S25	Screw 8.50/100pk 2-3wks		
2.	"	MS27039-0808	Screw 13.09/100pk Stk Memphis		
3.	"	AN525-8R12	Screw .15¢ EA 2-3wks		
4.	"	MS24694-S25	Screw Sourcing - will Advise		
5.	50	AN5-20A	Bolt 2.25/4pk Memphis		
6.	10	AN6-15A	Bolt 3.03/4pk ~~Memphis~~ No Stock	$210 each	
7.					
8.					
9.			Thanks! Megan		
10.					

1/4-28 x25
1 1/8 grip
MS 24693-S307
No stock.
Leaves None

Leaves
No stock.
Bag 50 @ 3.32 ea
None.
PO 11045

FAX

Asia	63-45-599-5490
Calgary	888-322-8281
Montreal	800-214-8875
Memphis	800-950-1411
Chicago	630-584-6037

API Technologies · Goodyear · Mercury Aviation Corporation

04/25/2011 15:09:22

API
2461 46th Ave.
LACHINE QC H8T 3C9
CANADA

Pack List

Shipping Address
AERO DESIGN LTD
2013 39 AVE NE
CALGARY AB T2E 6R7
CANADA

Forwarding Agent's Address

Shipping Instructions
Detailed Shipping Instructions at the end of the document

Packing Instructions
Detailed Packing Instructions at the end of the document

Information

Document Number	80873647
Document Date	04/25/2011
Purchase Order No.	11044
Purchase Order Date	04/18/2011
Sales Order Number	774832
Sales Order Date	04/18/2011
Customer Number	5101060
Shipping Conditions	Will Call
Incoterms	
Cust Ship Acct	
Delivery Date	04/25/2011
Bill of Lading	
Total Weight	0.810 LB
Total Volume	1,707.550 IN3
Carrier	UPS CANADA

Item	Material	Material Description	Quantity	Weight	Batch Num
10	MS24693S25	MACHINE SCREW (PKG 100)			
	Batches				
	0001807972 (PO:4500145057)		1 PAC	0 LB	
20	AN6-15A	BOLT (PKG 4)			
	Batches				
	0001807971 (PO:4500145057)		3 PAC	0.810 LB	

Shipping and Packing Instructions

CERTIFICATE OF CONFORMANCE

I hereby certify that th eaircraft parts described hereon were acquired from a source of supply that is consistent with the conditions under which Transport Canada distributor approval number 77-98 has been granted.

Authorized Signature Rw

AO # 77-98
API # 11

Return Policies

Warranty Information

The manufacturer warrants most products sold by API. In addition, API will gladly process warranty claims for products originally purchased through API. API offers no additional warranty beyond that of the manufacturer. Many manufacturers include warranty information in their packaging. Please feel free to contact an API Quality Service Representative concerning warranty information or to obtain the RMA (Return Materials Authorization) needed to file a warranty claim. To speak with an API Quality Service Representative dial 888-API-24X7 (888-274-2497). RMAs are valid for 30 days from date issued.

A warranty claim form and an RMA must accompany all products returned for warranty. Without this documentation API will not be able to assist you in filing your claim. Manufacturer warranty claim forms are available at WWW.APIWORLDWIDE.COM.

Please be advised that some manufacturers honor warranties by remanufacturing the part rather than issuing credit. API will return the remanufactured part to the customer.

Returns Made Easy

API accepts most returns that were purchased from our stock within 30 days of invoke. Just call an API Quality Service Representative at 888-API-24X7 (888-274-2497) to obtain the necessary RMA (Return Materials Authorization) number. By simply including the API RMA with your return, the time needed to issue credit is minimized. Nobody enjoys having to return parts. API understands this and makes it as trouble-free as possible. Remember, all returned items must be in their original packaging, must be in new, uninstalled condition and include all original documentation. A restocking fee of 15%, with a minimum of $25.00, will be assessed on all stocked items except those due to an error on API's part. RMAs are valid for 30 days from the date of issue.

No returns will be accepted 30 days from the date of invoice. Please remember that Electrical Components, Shelf-Life Limited, Non-Stock items, Drop-ship Items and Special Orders are non-returnable. Once the RMA expires the return can no longer be accepted by API and will be returned at the customer's expense.

Quick Core Credit

When ordering exchange items, the API system will automatically assign the necessary RMA (Return Materials Authorization) number to return your core. The API CSR will supply you with any additional details needed to return your core. All cores are subject to final inspection and acceptance from the vendor or manufacturer. Unless prior written authorization is obtained from API, all cores must be "like part numbers" and must be in serviceable condition. Otherwise, API will pass on any fees assessed by our manufacturer for substandard or unlike cores.

The API RMA system will print a Core Letter, which includes the customer's name and the API delivery number in which the exchange was purchased. The Core Letter must accompany all core returns. This RMA is valid for 60 days from date of invoice. Please ask your API Quality Service Representative for the return due date of your particular core. Once the RMA expires the core can no longer be accepted by API and will be returned at the customer's expense. *In the event your Return Core Letter is misplaced, contact the API Quality Service Representative to obtain a replacement.*

We appreciate your business and reaffirm our commitment to provide the most responsive customer service, as well as the highest quality compliant products, at competitive prices.

API
AEROSPACE PRODUCTS INTERNATIONAL

API
2461 46th Ave.
LACHINE QC H8T 3C9
CANADA
Phone: 514-636-5720
Fax: 514-636-6092
GST # 143526788RT

PRICING LIST

NUMBER	DATE
80873647	04/25/2011

PLEASE REMIT TO:
PO Box
Calgary AB T2P 2H6
REFER TO INVOICE NUMBER WHEN REMITTING

5101060

BILL TO AERO DESIGN LTD
2013 39 AVE NE
CALGARY AB T2E 6R7
CANADA

5101060

SHIP TO AERO DESIGN LTD
2013 39 AVE NE
CALGARY AB T2E 6R7
CANADA

Phone No: 403-250-8027

CUSTOMER PURCHASE ORDER NO.	ORDER NO. / DELIVERY NO.
11044	774832 - 80873647

SHIPPED VIA	DELIVERING PLANT	CARTONS
	API - Montreal	1

QUANTITY ORDERED	QUANTITY SHIPPED	DESCRIPTION MATERIAL		U/M	LIST PRICE	UNIT PRICE	EXTENDED PRICE
1		MACHINE SCREW (PKG 100)	MS24693S25	PA	8.68	8.50	8.50
3		BOLT (PKG 4)	AN6-15A	PA	6.74	3.03	9.09
		Item Total					17.59
		Canadian GST					0.88

TOTAL CAD 18.47

Return Policies

Warranty Information

The manufacturer warrants most products sold by API. In addition, API will gladly process warranty claims for products originally purchased through API. API offers no additional warranty beyond that of the manufacturer. Many manufacturers include warranty information in their packaging. Please feel free to contact an API Quality Service Representative concerning warranty information or to obtain the RMA (Return Materials Authorization) needed to file a warranty claim. To speak with an API Quality Service Representative dial 888-API-24X7 (888-274-2497). RMAs are valid for 30 days from date issued.

A warranty claim form and an RMA must accompany all products returned for warranty. Without this documentation API will not be able to assist you in filing your claim. Manufacturer warranty claim forms are available at WWW.APIWORLDWIDE.COM.

Please be advised that some manufacturers honor warranties by remanufacturing the part rather than issuing credit. API will return the remanufactured part to the customer.

Returns Made Easy

API accepts most returns that were purchased from our stock within 30 days of invoke. Just call an API Quality Service Representative at 888-API-24X7 (888-274-2497) to obtain the necessary RMA (Return Materials Authorization) number. By simply including the API RMA with your return, the time needed to issue credit is minimized. Nobody enjoys having to return parts. API understands this and makes it as trouble-free as possible. Remember, all returned items must be in their original packaging, must be in new, uninstalled condition and include all original documentation. A restocking fee of 15%, with a minimum of $25.00, will be assessed on all stocked items except those due to an error on API's part. RMAs are valid for 30 days from the date of issue.

No returns will be accepted 30 days from the date of invoice. Please remember that Electrical Components, Shelf-Life Limited, Non-Stock items, Drop-ship Items and Special Orders are non-returnable. Once the RMA expires the return can no longer be accepted by API and will be returned at the customer's expense.

Quick Core Credit

When ordering exchange items, the API system will automatically assign the necessary RMA (Return Materials Authorization) number to return your core. The API CSR will supply you with any additional details needed to return your core. All cores are subject to final inspection and acceptance from the vendor or manufacturer. Unless prior written authorization is obtained from API, all cores must be "like part numbers" and must be in serviceable condition. Otherwise, API will pass on any fees assessed by our manufacturer for substandard or unlike cores.

The API RMA system will print a Core Letter, which includes the customer's name and the API delivery number in which the exchange was purchased. The Core Letter must accompany all core returns. This RMA is valid for 60 days from date of invoice. Please ask your API Quality Service Representative for the return due date of your particular core. Once the RMA expires the core can no longer be accepted by API and will be returned at the customer's expense. *In the event your Return Core Letter is misplaced, contact the API Quality Service Representative to obtain a replacement.*

We appreciate your business and reaffirm our commitment to provide the most responsive customer service, as well as the highest quality compliant products, at competitive prices.

API
AEROSPACE PRODUCTS INTERNATIONAL

API
#550 - 575 Palmer Road N.E.
CALGARY AB T2E 7G4
CANADA

04/20/2011 13:28:45

Pack List

Shipping Address
AERO DESIGN LTD
2013 39 AVE NE
CALGARY AB T2E 6R7
CANADA

Forwarding Agent's Address

Shipping Instructions
Detailed Shipping Instructions at the end of the document

Packing Instructions
Detailed Packing Instructions at the end of the document

Information

Document Number	80871962
Document Date	04/20/2011
Purchase Order No.	11044
Purchase Order Date	04/18/2011
Sales Order Number	774832
Sales Order Date	04/18/2011
Customer Number	5101060
Shipping Conditions	Will Call
Incoterms	
Cust Ship Acct	
Delivery Date	04/20/2011
Bill of Lading	
Total Weight	3.240 LB
Total Volume	326.500 IN3
Carrier	WILL CALL

Item	Material	Material Description	Quantity	Weight	Batch Num
10	MS27039-08-08	MACHINE SCREW (PKG 100)			
	Batches				
	0001732405 (PO:4500145059)		1 PAC	0.445 LB	
20	AN5-20A	BOLT (PKG 4)			
	Batches				
	0001712824 (PO:4500145059)		11 PAC	2.365 LB	
	0001723910 (PO:4500145059)		2 PAC	0.430 LB	

Shipping and Packing Instructions

CERTIFICATE OF CONFORMANCE

I hereby certify that th eaircraft parts described hereon were acquired from a source of supply that is consistent with the conditions under which Transport Canada distributor approval number 77-98 has been granted.

Authorized Signature _____

AO # 77-98
API # 5

Return Policies

Warranty Information

The manufacturer warrants most products sold by API. In addition, API will gladly process warranty claims for products originally purchased through API. API offers no additional warranty beyond that of the manufacturer. Many manufacturers include warranty information in their packaging. Please feel free to contact an API Quality Service Representative concerning warranty information or to obtain the RMA (Return Materials Authorization) needed to file a warranty claim. To speak with an API Quality Service Representative dial 888-API-24X7 (888-274-2497). RMAs are valid for 30 days from date issued.

A warranty claim form and an RMA must accompany all products returned for warranty. Without this documentation API will not be able to assist you in filing your claim. Manufacturer warranty claim forms are available at WWW.APIWORLDWIDE.COM.

Please be advised that some manufacturers honor warranties by remanufacturing the part rather than issuing credit. API will return the remanufactured part to the customer.

Returns Made Easy

API accepts most returns that were purchased from our stock within 30 days of invoke. Just call an API Quality Service Representative at 888-API-24X7 (888-274-2497) to obtain the necessary RMA (Return Materials Authorization) number. By simply including the API RMA with your return, the time needed to issue credit is minimized. Nobody enjoys having to return parts. API understands this and makes it as trouble-free as possible. Remember, all returned items must be in their original packaging, must be in new, uninstalled condition and include all original documentation. A restocking fee of 15%, with a minimum of $25.00, will be assessed on all stocked items except those due to an error on API's part. RMAs are valid for 30 days from the date of issue.

No returns will be accepted 30 days from the date of invoice. Please remember that Electrical Components, Shelf-Life Limited, Non-Stock items, Drop-ship Items and Special Orders are non-returnable. Once the RMA expires the return can no longer be accepted by API and will be returned at the customer's expense.

Quick Core Credit

When ordering exchange items, the API system will automatically assign the necessary RMA (Return Materials Authorization) number to return your core. The API CSR will supply you with any additional details needed to return your core. All cores are subject to final inspection and acceptance from the vendor or manufacturer. Unless prior written authorization is obtained from API, all cores must be "like part numbers" and must be in serviceable condition. Otherwise, API will pass on any fees assessed by our manufacturer for substandard or unlike cores.

The API RMA system will print a Core Letter, which includes the customer's name and the API delivery number in which the exchange was purchased. The Core Letter must accompany all core returns. This RMA is valid for 60 days from date of invoice. Please ask your API Quality Service Representative for the return due date of your particular core. Once the RMA expires the core can no longer be accepted by API and will be returned at the customer's expense. *In the event your Return Core Letter is misplaced, contact the API Quality Service Representative to obtain a replacement.*

We appreciate your business and reaffirm our commitment to provide the most responsive customer service, as well as the highest quality compliant products, at competitive prices.

API
AEROSPACE PRODUCTS INTERNATIONAL

API
#550 - 575 Palmer Road N.E.
CALGARY AB T2E 7G4
CANADA
Phone: 403-250-9383
Fax: 403-250-8186
GST # 143526788RT

PRICING LIST

NUMBER	DATE
80871962	04/20/2011

PLEASE REMIT TO:
PO Box
Calgary AB T2P 2H6
REFER TO INVOICE NUMBER WHEN REMITTING

5101060

BILL TO AERO DESIGN LTD
2013 39 AVE NE
CALGARY AB T2E 6R7
CANADA

5101060

SHIP TO AERO DESIGN LTD
2013 39 AVE NE
CALGARY AB T2E 6R7
CANADA

Phone No: 403-250-8027

CUSTOMER PURCHASE ORDER NO.	ORDER NO. / DELIVERY NO.
11044	774832 - 80871962

SHIPPED VIA	DELIVERING PLANT	CARTONS
	API - Calgary	1

QUANTITY ORDERED	QUANTITY SHIPPED	DESCRIPTION MATERIAL		U/M	LIST PRICE	UNIT PRICE	EXTENDED PRICE
1		MACHINE SCREW (PKG 100)	MS27039-08-08	PA	29.10	13.09	13.09
13		BOLT (PKG 4)	AN5-20A	PA	5.01	2.25	29.25
		Item Total					42.34
		Canadian GST					2.11

TOTAL CAD 44.45

Return Policies

Warranty Information

The manufacturer warrants most products sold by API. In addition, API will gladly process warranty claims for products originally purchased through API. API offers no additional warranty beyond that of the manufacturer. Many manufacturers include warranty information in their packaging. Please feel free to contact an API Quality Service Representative concerning warranty information or to obtain the RMA (Return Materials Authorization) needed to file a warranty claim. To speak with an API Quality Service Representative dial 888-API-24X7 (888-274-2497). RMAs are valid for 30 days from date issued.

A warranty claim form and an RMA must accompany all products returned for warranty. Without this documentation API will not be able to assist you in filing your claim. Manufacturer warranty claim forms are available at WWW.APIWORLDWIDE.COM.

Please be advised that some manufacturers honor warranties by remanufacturing the part rather than issuing credit. API will return the remanufactured part to the customer.

Returns Made Easy

API accepts most returns that were purchased from our stock within 30 days of invoke. Just call an API Quality Service Representative at 888-API-24X7 (888-274-2497) to obtain the necessary RMA (Return Materials Authorization) number. By simply including the API RMA with your return, the time needed to issue credit is minimized. Nobody enjoys having to return parts. API understands this and makes it as trouble-free as possible. Remember, all returned items must be in their original packaging, must be in new, uninstalled condition and include all original documentation. A restocking fee of 15%, with a minimum of $25.00, will be assessed on all stocked items except those due to an error on API's part. RMAs are valid for 30 days from the date of issue.

No returns will be accepted 30 days from the date of invoice. Please remember that Electrical Components, Shelf-Life Limited, Non-Stock items, Drop-ship Items and Special Orders are non-returnable. Once the RMA expires the return can no longer be accepted by API and will be returned at the customer's expense.

Quick Core Credit

When ordering exchange items, the API system will automatically assign the necessary RMA (Return Materials Authorization) number to return your core. The API CSR will supply you with any additional details needed to return your core. All cores are subject to final inspection and acceptance from the vendor or manufacturer. Unless prior written authorization is obtained from API, all cores must be "like part numbers" and must be in serviceable condition. Otherwise, API will pass on any fees assessed by our manufacturer for substandard or unlike cores.

The API RMA system will print a Core Letter, which includes the customer's name and the API delivery number in which the exchange was purchased. The Core Letter must accompany all core returns. This RMA is valid for 60 days from date of invoice. Please ask your API Quality Service Representative for the return due date of your particular core. Once the RMA expires the core can no longer be accepted by API and will be returned at the customer's expense. *In the event your Return Core Letter is misplaced, contact the API Quality Service Representative to obtain a replacement.*

We appreciate your business and reaffirm our commitment to provide the most responsive customer service, as well as the highest quality compliant products, at competitive prices.

AERO Design Ltd.
2013 - 39th Avenue N.E.
Calgary, Alberta, T2E 6R7
Phone: (403) 250-8027
Fax: (403) 250-8333

Purchase Order

P.O. Number	**11041**
Date	04-Apr-11

Vendor:	
Name:	Loyalty Metal
Address:	Bay 103, 5621 - 11th Street NE, Calgary AB, T2E 6Z7
Phone:	275-0033
Fax:	275-0076
Attention:	Thomas Tran
Currency:	CAD

Ship To:	
Name:	AERO Design Ltd.
Address:	2013 - 39th Avenue N.E. Calgary, Alberta, T2E 6R7
Phone:	(403) 250-8027
Fax:	(403) 250-8333
Attention:	Jeff Clarke

ITEM	DESCRIPTION	QTY	RATE	AMOUNT
	69878-01 Compression Spring	230	3.75	862.50
	36278-01L Torsion Spring	50	3.50	175.00
	36278-01R Torsion Spring	50	3.50	175.00
		Subtotal		1,212.50
	Sales Tax	GST	5.00%	60.63
		Total	**CAD**	**$1,273.13**

LOYALTY METAL FACTORY LTD.

103, 5621 - 11th St N.E., Calgary, Alta, Canada T2E 6Z7
TEL: (403) 275 - 0033 ● FAX: (403) 275 - 0076

INVOICE 8368

G.S.T. NO. R 103402129

CUSTOMER: AERO DESIGN. PO 11041

DATE: APRIL 4/2011 SALESMAN:

ADDRESS:

PHONE:

QTY.	DESCRIPTION	UNIT PRICE	AMOUNT
230	69878-01 COMPRESSION SPRING	3.75	862.50
50	36278-01L TORSION SPRINGS	3.50	175.00
50	36278-01R TORSION SPRINGS	3.50	175.00
	Chq # 2473		

YOUR ORDER NO.	TERMS		
		TOTAL	1212.50
		G.S.T.	60.63
		TOTAL WITH G.S.T.	1273.13
		PAYMENT/DEPOSIT	01
		BALANCE	

PLEASE, PAYMENT WITHIN 30 DAYS.
5% INTEREST WILL BE ADDED AFTER DUE DATE.

CUSTOMER SIGNATURE

AERO DESIGN LTD.
2013 – 39th Ave N. E., Calgary, Alberta, T2E 6R7 www.aerodesign.ca

F A X C O V E R S H E E T

DATE:	March 9, 2011	**TIME:**	1:22 PM
TO:	**Loyalty Metal**	**PHONE:**	403-275-0033
	Thomas Tran	**FAX:**	403-275-0076
FROM:	Jeff Clarke Aero Design Ltd.	**PHONE:** **FAX:**	403-250-8027 403-250-8333

Number of pages including cover sheet: 3

RE: SPRINGS

Thomas,

I am looking to have springs made to the attached drawings. You have made these for us a few times.

Qty	Part Number	Description	Price	Price (2009)
200	69878-01	Compression Spring		($3.75 ea)
50	36278-01L	Torsion Spring (left)		($3.50 ea)
50	36278-01R	Torsion Spring (right)		($3.50 ea)

Please let me know the current price and when they will be ready.

Thank you.

Jeff Clarke

Jeff Clarke

MAR 14 → PRICE SHOULD BE THE SAME
TOLD TO GO AHEAD 2 WEEKS.

REV.	DESCRIPTION OF CHANGE	INITIALS	DATE
0	INITIAL ISSUE – CREATED FROM 36210	STF	MAY 17/02
1	LENGTH OF SPRING CHANGED	BJC	APR 13/04
2	LENGTH OF SPRING CHANGED, MATERIAL CHANGED, DWG REFORMATTED	BJC	JAN 2/07

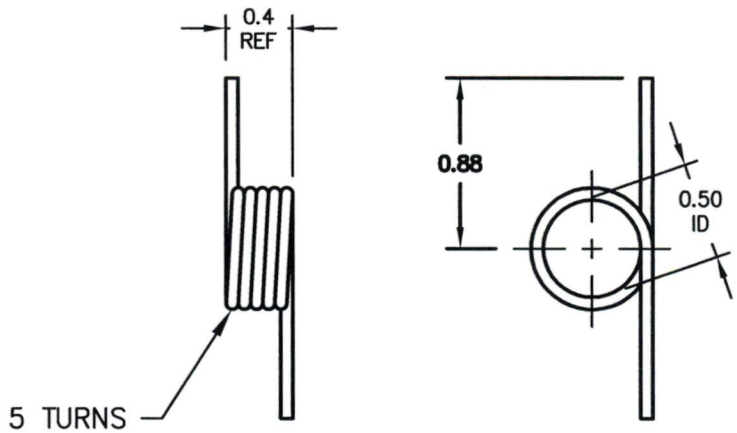

50 LEFT
50 RIGHT

(01) TORSION SPRING

(RELAXED POSITION)
LH SHOWN, RH OPPOSITE

PART NO.	ITEM	DESCRIPTION	MATERIAL	MATERIAL SPEC.	STOCK SIZE
36278–01	01	TORSION SPRING	302 STAINLESS STEEL	ASTM–A313	0.065" SPRING WIRE

LIST OF MATERIALS

-- NOTICE --
THIS DRAWING CONTAINS INFORMATION AND DATA WHICH IS PROPRIETARY TO AERO DESIGN LTD. THIS DRAWING, OR ANY PORTION THEREOF, MAY NOT BE REPRODUCED, COPIED, OR DUPLICATED IN ANY MANNER, NOR USED FOR MANUFACTURING WITHOUT THE WRITTEN CONSENT OF AERO DESIGN LTD. BY ACCEPTING THIS DRAWING FOR REFERENCE, THE RECIPIENT AGREES TO HOLD AERO DESIGN LTD. HARMLESS FROM THE USE, OR MISUSE, OF THIS DRAWING OR THE INFORMATION CONTAINED THEREON.

APPROVALS		DATE
DRAWN:	STEVEN FAHEY	MAY 17/02
CHECKED:	E. BURGOIN	MAY 01/03

UNLESS OTHERWISE SPECIFIED DIMENSIONS ARE IN INCHES.
TOLERANCES ON:

DECIMALS		ANGLES
X.XXX	±0.010	±1/2°
X.XX	±0.03	
X.X	±0.1	

AERO DESIGN LTD.
CONSULTING ENGINEERS, TRANSPORT CANADA APPROVALS, DAR 290M
2013 – 39TH AVENUE N.E., CALGARY, ALBERTA, CANADA, T2E 6R7
tel: (403) 250–8027 fax: (403) 250–8333 aerodesign@telusplanet.net

TORSION SPRING
FABRICATION DRAWING

SCALE 1 : 1	DWG. SIZE	DWG. NO.	REV.
SHEET 1 OF 1	A4	36278	2

REV.	DESCRIPTION OF CHANGE	INITIALS	DATE
0	INITIAL ISSUE	STF	JUL 17/08

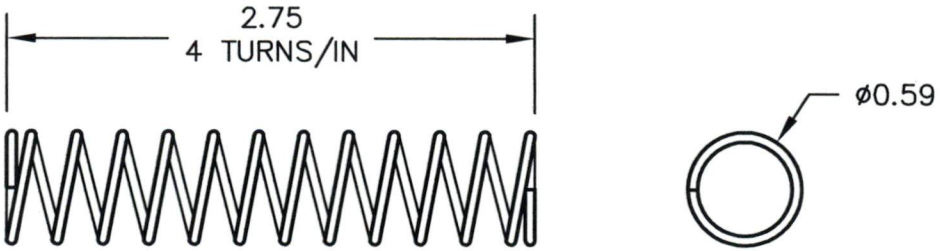

200

COMPRESSION SPRING

QTY	PART NO.	DESCRIPTION	MATERIAL	STOCK SIZE
100	69878-01	COMPRESSION SPRING	AISI 302 STAINLESS	0.055" WIRE

LIST OF MATERIALS

-- NOTICE --
THIS DRAWING CONTAINS INFORMATION AND DATA WHICH IS PROPRIETARY TO AERO DESIGN LTD. THIS DRAWING, OR ANY PORTION THEREOF, MAY NOT BE REPRODUCED, COPIED, OR DUPLICATED IN ANY MANNER, NOR USED FOR MANUFACTURING WITHOUT THE WRITTEN CONSENT OF AERO DESIGN LTD. BY ACCEPTING THIS DRAWING FOR REFERENCE, THE RECIPIENT AGREES TO HOLD AERO DESIGN LTD. HARMLESS FROM THE USE, OR MISUSE, OF THIS DRAWING OR THE INFORMATION CONTAINED THEREON.

APPROVALS		DATE
DRAWN:	S. FAHEY	JUL 17/08
CHECKED:	E. BURGOIN	JUL 17/08

UNLESS OTHERWISE SPECIFIED DIMENSIONS ARE IN INCHES.
TOLERANCES ON:

DECIMALS		ANGLES
X.XXX	±0.010	±1/2°
X.XX	±0.03	
X.X	±0.1	

AERO DESIGN LTD.
CONSULTING ENGINEERS, TRANSPORT CANADA APPROVALS, DAR 290M
2013 – 39TH AVENUE N.E., CALGARY, ALBERTA, CANADA, T2E 6R7
tel: (403) 250-8027 fax: (403) 250-8333 www.aerodesign.ca

COMPRESSION SPRING

FABRICATION DRAWING

SCALE 1 : 1	DWG. SIZE	DWG. NO.	REV.
SHEET 1 OF 1	A4	69878	0

AERO Design Ltd.
2013 - 39th Avenue N.E.
Calgary, Alberta, T2E 6R7
Phone: (403) 250-8027
Fax: (403) 250-8333

Purchase Order

P.O. Number	**11040**
Date	04-Apr-11

Vendor:	
Name:	Unified Alloys
Address:	Bay #1 7408 - 40 Street SE, Calgary AB T2C 2L6
Phone:	403-236-2216
Fax:	403-236-7458
Attention:	Sherri Liggins
Currency:	CAD

Ship To:	
Name:	AERO Design Ltd.
Address:	2013 - 39th Avenue N.E. Calgary, Alberta, T2E 6R7
Phone:	(403) 250-8027
Fax:	(403) 250-8333
Attention:	Jeff Clarke

ITEM	DESCRIPTION	QTY	RATE	AMOUNT
1	Seamless Stainless Steel Tubing ASTM A269 3/8" OD x 0.065 wall T316/L 20 foot	80	1.76	140.80
		Subtotal		140.80
	Sales Tax	GST	5.00%	7.04
		Total	**CAD**	**$147.84**

UNIFIEDALLOYS™
Bay #1 7408 - 40 Street S.E. Calgary AB Canada T2C 2L6
t. 403.236.2216 f. 403.236.7458 e. ab@unifiedalloys.com
www.unifiedalloys.com

SELLING WAREHOUSE	SHIPPING WAREHOUSE	PAGE	DATE	PACKING SLIP NUMBER
CALGARY	CALGARY	1	04/04/2011 11:42	CS-159564 / 001

SOLD TO
AERO DESIGN LTD.
2013 - 39 AVE N.E
CALGARY, AB
T2E 6R7

SHIP TO
AERO DESIGN LTD.
2013 - 39 AVE N.E
CALGARY, AB
T2E 6R7

CUSTOMER P.O. NUMBER	ORDERED BY		PROV. LIC. NO.	SALESMAN	TERMS
11040	JEFF			MIKE DESROCHERS	NET 30 DAYS

ORDER DATE	SHIP DATE	F.O.B.	SHIP VIA	PPD	COLL	CUSTOMER NUMBER
04/04/2011		PREPAID; PM DELIVERY	T & T		PREPAID	0000442 / 01

ITEM	PRODUCT CODE	DESCRIPTION	ORDERED	SHIPPED	BACK ORDER	UOM	HEAT/TRACE NUMBER
		SEAMLESS STAINLESS STEEL TUBING,COLD DRAWN TO ASTM A269/A213 AVG WALL, EDDY CURRENT OR HYDRO TESTED, RB80 MAX.					
2	38065316CG	3/8" O.D. X .065 WALL T316/L SMLS 20 FOOT **-> "CG" BIN #2 <-**	80.00	80	0	FT	01010095

PACKING SLIP

TOTAL NET WEIGHT 17.2160

INTERTEK ISO 9001:2008

RECEIVED BY	SHIPPED BY	PACKAGE DESCRIPTIONS
	DH26 04/04/11	1-20' Bundle (CE)

REFER TO BACK OF PAGE FOR TERMS AND CONDITIONS OF SALE

A trademark of Unified Alloys Ltd. used by Unified Alloys (Calgary) Ltd.

P/S - CAL (03/11) G.S.T. REGISTRATION # 12166 9485 RT0001

CUSTOMER COPY

TERMS AND CONDITIONS OF SALE

1. The prices shown herein are based upon factory costs, exchange rates, duty and applicable taxes under Federal, Provincial or Municipal Law now prevailing. We, as Sellers, reserve the right to adjust this price or these prices should there be any change prior to shipment or customs clearance in such factory costs, exchange, duty or taxes.

2. We will not be liable for any claim as a result of any defect or insufficient quality in the goods delivered under this order, unless such claim is made in writing within ten (10) days after receipt of the goods and unless the goods or items concerned are returned prepaid to our Shipping Warehouse for examination, if we so request.

3. Our guarantee on products is limited to the guarantee extended to us by the original manufacturer. On any claims for repair and/or replacement under such guarantee, all cost incurred by us which are not underwritten by the original manufacturer, shall be for claimant's account.

   Claims under this guarantee shall be submitted promptly in writing to our head office and shall be recognized only if the goods or items concerned are returned prepaid to our Shipping Warehouse for examination, if we so request. Examination at any other place shall be made at the expense of the Claimant.

   WARNING

4. It is the Buyer's responsibility to ensure that the products ordered are suitable for their purposes, and to ensure that all personnel working with the products are aware of the specifications of the products. We will not be liable for any claim as a result of unsuitable products or lack of knowledge of the specifications.

   QUANTITIES

5. We reserve the right to ship ten (10) percent more or less than the quantity ordered, unless otherwise specified herein.

6. We shall not be liable for the loss, damage, detention or delay due to causes beyond our reasonable control arising in the manufacture, shipment or delivery of the goods, nor shall our liability under any of the provisions of these conditions extend to consequential damages of any kind, or to freight charges for the return of goods or items to our Shipping Warehouse for examination, if we so request.

   RETURNS

7. Credit for returned material will not be granted, unless such material has been returned with our prior written consent.

   CANCELLATIONS

8. Orders may not be cancelled or suspended, except with our prior written consent. Restocking charges may apply.

   DELIVERY DATES

9. Promises of delivery are estimated as carefully as possible and although we do our best to ship within the time mentioned, we cannot, nor will we guarantee to do so.

UNIFIEDALLOYS™
STAINLESS STEEL AND ALLOY SPECIALISTS

Monday, 04-Apr-2011

From:

Calgary MTR - WH .
Phone : 403-236-2216
Email : m.helaf-ali@unifiedalloys.com

To:

Document Summary Page

The MTRs are printed in the following order:

#	Heat	Item # / SKU	Description
1	01010095	38065316CG	3/8" O.D. X .065 WALL T316/L SMLS 20 FOOT **-> "C

MTRs produced using MetalTrace®. Visit www.TraceApps.com or call toll-free 1-866-429-7007 for more information.

検 査 成 績 表
(MILL CERTIFICATE)

需 要 家：
(CUSTOMER) UNIFIED ALLOYS
注 文 者： 三京物産株式会社殿
(SUPPLIER) (SANKYO&CO., LTD.)
品 名：
(COMMODITY) SEAMLESS STAINLESS STEEL COLD DRAWN TUBE
ASTM A269/A213 ASME/SA213 (A.W.) TP316/316L
契 約 番 号：T09CA09-A
(CONTRACT NO.)

三京不銹鋼管(沈陽)有限公司
SANKYO STAINLESS TUBE(SHEN YANG) CO., LTD.
中国・瀋陽市蘇家屯区玖瑰街115号
(NO.115 MEIGUI STREET, SUJIATUN DISTRICT, SHENYANG, P.R. CHINA)

発 行 日： 2010,10,06
(DATE OF ISSUE)
証 明 書 番 号： 10-0940
(CERTIFICATE NO.)
需 要 家 管 理 番 号：P.O.# CP-50779
(CUSTOMER ORDER NO.)

寸法: 3/8 " OD × 0.065 " WT × 20´ LG
(SIZE)

製作番号 (Mfg. No.) (三京) (SANKYO)	ロット番号 (Lot No.)	製造番号 (Mfg. No.)	製鋼番号 (Heat No.)	数量(Quantity) 本数 (No.of Pcs.)	重量 (Mass)	延長 (Total Lengths)	引張試験(Tension Test) 0.2%耐力 (0.2% Y. S.)	引張り強さ (T. S.)	伸び (E.)	硬さ試験 (Hardness Test) HRB	結晶粒度 (Grain Size)
	指定単位(Unit Designateed)			本(Pcs.)	kg	m	MPa	MPa	(%)		
	規 格 (Specification)		最小(Min)				170	485	35		
			最大(Max)								
10-09-045	02		01010095	20	40		265	585	51.0	72.7	
			TOTAL	20	40						

へん平試験 (Flattening)	GOOD
押し広げ試験 (Flaring)	GOOD
外観寸法試験 (Measurement&surface)	GOOD
渦流探傷試験 (Eddy Current)	GOOD
検鏡試験 (Microscopic)	—
硫酸銅腐蝕試験 (Intergranular Corrosion Test) ASTM A262 PRACTICE E	GOOD

化 学 成 分 表 (Chemical Composition) %

製鋼番号 (Heat No.)	C × 100	Si × 100	Mn × 100	P × 1000	S × 1000	Ni × 100	Cr × 100	Mo × 100
最小(Min)						1000	1600	200
最大(Max)	3.5	100	200	45	30	1400	1800	300
01010095	2.3	33	122	29	1	1009	1638	216

備考(Remarks)

SOLUTION HEAT TREATMENT:
1100℃ × 2.59Min/W.Q
EN-10204-3.1
NACE MR-0175

上記注文品は、御指定の規格又は仕様に従って製造されその要求事項を満足していることを証明します。
(IT IS HEREWITH CERTIFIED THAT THE ABOVE MATERIALS ARE SATISFACTORY IN COMPLIANCE WITH

総工場長 Zhang Zhiyong

AERO Design Ltd.
2013 - 39th Avenue N.E.
Calgary, Alberta, T2E 6R7
Phone: (403) 250-8027
Fax: (403) 250-8333

Purchase Order

P.O. Number	**11039**
Date	01-Apr-11

Vendor:

Name: Thomas Skinner and Sons Ltd.
Address: Bay 6, 4925 - 77th Ave. S.E.
Calgary, AB, T2C 2X4
Phone: 720-3201
Fax: 0
Attention: 0
Currency: CAD

Ship To:

Name: AERO Design Ltd.
Address: 2013 - 39th Avenue N.E.
Calgary, Alberta, T2E 6R7
Phone: (403) 250-8027
Fax: (403) 250-8333
Attention: Jeff Clarke

ITEM	DESCRIPTION	QTY	RATE	AMOUNT
1	Refractometer	1	120.14	120.14
2	#4 Centre Drill	4	1.80	7.20
3	#5 Centre Drill	1	4.89	4.89
4	#6 Centre Drill	1	7.84	7.84
		Subtotal		140.07
	Sales Tax	GST	5.00%	7.00
		Total	**CAD**	**$147.07**

ORDER CONFIRMATION

Thank you for placing an order with Thomas Skinner. You will receive an email confirmation within the next 30 minutes. Please do not re-click the Submit button as your order will then be duplicated. If you do not receive an email confirmation please contact our Customer Service Department at 604-207-3117 or 1-866-933-3117 to confirm that your order was received properly.

Order # 1480426

Ship Method
SEE DETAIL BELOW

PO Number
11039

Ship To
AERO DESIGN LTD.
Jeff Clarke
2013-39TH AVE. NE
CALGARY, AB T2E 6R7
1-403-250-8027
DHL ground free shipping

Payment Method
Pay by Invoice

Description	Quantity	Price	Extended Price
ZEB-OPT32 REFRACTOMETER 0-32% BRIX SCALE	1	$120.14/EA	$120.14
SOW-125283 CENTRE DR #4	4	$1.80/EA	$7.20
SOW-125284 CENTRE DR #5	1	$4.89/EA	$4.89
SOW-125285 CENTRE DR #6 STM	1	$7.84/EA	$7.84

Total web discounts already applied: $7.35

Subtotal $140.07

Tax $7.00

Total $147.07

If your order is within our Pre-Paid Shipping Policy (consumable orders over $100 and under 50lbs) we will adjust the shipping method you requested to Pre-Paid Ground unless you have indicated an AIR shipment. Freight will be determined at time of invo

PACKING LIST

THOMAS SKINNER
13880 Vulcan Way, Richmond
BC, V6V 1K6, Canada
Tel. (604) 276-2131
Fax (604) 276-8545
http://www.tskinner.com
e-mail: tss@tskinner.com

Shipment Discrepancies:
All lost or short shipment claims must be made within five days after receipt of merchandise. Freight damage is to be claimed against the carrier upon receipt of goods.

INVOICE NUMBER	
450504945	
INVOICE DATE	PAGE
4/1/2011 07:49:24	1 of 1
ORDER NUMBER	
1480426	

Bill To:

AERO DESIGN LTD.
2013-39TH AVE. NE
CALGARY, AB T2E 6R7
1-403-250-8027

Ship To:

AERO DESIGN LTD.
2013-39TH AVE. NE
CALGARY, AB T2E 6R7

Ordered By: Mr. JEFF CLARKE

Customer ID: 111415 **Carrier:** PREPAID **Tracking #:** YDHAFVD00005

Purchase Order Number	*Terms*	**GST# R105267983**
11039	Net 30	

Order Date	*Pick Ticket*	*Territory Manager*	*Customer Service Contact*
4/1/2011 07:34:58	3499954	WALTER. THORNHILL	ESTORE1

Quantities				*Item ID* *Item Description*	*UOM*	*Unit Size*
Ordered	*Shipped*	*Remaining*	*Disp.*			
4.00	4.00	0.00		SOW-125283 CENTRE DR #4	EA	1.0
1.00	1.00	0.00		SOW-125284 CENTRE DR #5	EA	1.0
1.00	1.00	0.00		SOW-125285 CENTRE DR #6 STM	EA	1.0

Total Pieces: 6 ***Total Lines:*** 3 ***Total Weight:*** 0

PACKING LIST

THOMAS SKINNER
13880 Vulcan Way, Richmond
BC, V6V 1K6, Canada
Tel. (604) 276-2131
Fax (604) 276-8545
http://www.tskinner.com
e-mail: tss@tskinner.com

Shipment Discrepancies:
All lost or short shipment claims must be made within five days after receipt of merchandise. Freight damage is to be claimed against the carrier upon receipt of goods.

INVOICE NUMBER	
450504969	
INVOICE DATE	PAGE
4/1/2011 09:05:49	1 of 1
ORDER NUMBER	
1480426	

Bill To:

AERO DESIGN LTD.
2013-39TH AVE. NE
CALGARY, AB T2E 6R7
1-403-250-8027

Ship To:

AERO DESIGN LTD.
2013-39TH AVE. NE
CALGARY, AB T2E 6R7

Ordered By: Mr. JEFF CLARKE

Customer ID: 111415 **Carrier:** SEE DETAIL BELOW **Tracking #:** 1825091

Purchase Order Number	*Terms*	**GST# R105267983**
11039	Net 30	

Order Date	*Pick Ticket*	*Territory Manager*	*Customer Service Contact*
4/1/2011 07:34:58	3499951	WALTER. THORNHILL	ESTORE1

Quantities				*Item ID* *Item Description*	*UOM*	*Unit Size*
Ordered	*Shipped*	*Remaining*	*Disp.*			
1.00	1.00	0.00		ZEB-OPT32 REFRACTOMETER 0-32% BRIX SCALE	EA	1.0

Total Pieces: 1 *Total Lines:* 1 *Total Weight:* 0

AERO Design Ltd.
2013 - 39th Avenue N.E.
Calgary, Alberta, T2E 6R7
Phone: (403) 250-8027
Fax: (403) 250-8333

Purchase Order

P.O. Number	**11038**
Date	07-Apr-11

Vendor:	
Name:	Thyssen Krupp
Address:	19044 - 95A Avenue Surrey BC V4N 4P2
Phone:	604-822-3493 ext. 14020
Fax:	800-926-2600
Attention:	Tim Skidmore
Currency:	CAD

Ship To:	
Name:	AERO Design Ltd.
Address:	2013 - 39th Avenue N.E. Calgary, Alberta, T2E 6R7
Phone:	(403) 250-8027
Fax:	(403) 250-8333
Attention:	Jeff Clarke

ITEM	DESCRIPTION	QTY	RATE	AMOUNT
1	6061-T6 Aluminum - 1" x 6" x 144" Bar	1	198.45	198.45
2	6061-T6 Aluminum - 1/2" x 6" x 144" Bar	1	99.50	99.50
3	6061-T6 Aluminum - 3/4" x 5" x 144" Bar	1	124.35	124.35
4	6061-T6 Aluminum - 1/2" x 3/4" x 144" Bar	10	15.10	151.00
5	6061-T6 Aluminum - 3" x 3" x 144" Bar	4	273.10	1,092.40
	Fuel Surcharge	5	7.60	38.00
		Subtotal		1,703.70
	Sales Tax	GST	5.00%	85.19
		Total	**CAD**	**$1,788.89**

ThyssenKrupp Materials NA
Copper and Brass Sales Division

ThyssenKrupp

QUOTE

ThyssenKrupp Materials NA, 19044 95A Avenue, Surrey, BC V4N 4P2

AERO DESIGN LTD.
2013 39 AVE NE
CALGARY AB T2E 6R7
Canada

TEL: 403-250-8027
FAX: 403-250-8333

DATE: 03/30/2011
QUOTE NO: 1200293245
YOUR INQUIRY:
ATTENTION TO: Steven Fahey
TEL: 403-250-8027
CUSTOMER NO: 10016771
DEPARTMENT: CAN VAN INS 01
CONTACT: Timothy Skidmore
TEL: 800-926-2600
FAX: 888-926-2600
EMAIL: timothy.skidmore@thyssenkrupp.com

Thank you for allowing us to quote on your requirement. Delivery contingent upon date ordered.

Delivery Address
AERO DESIGN LTD., 2013 39 AVE NE, CALGARY, AB T2E 6R7, CANADA
Unloading Point: Unload Point 1

Earliest Delivery Date: **04/08/2011**

ITEM	DESCRIPTION	QTY1 UOM QTY2 UOM QTY3 UOM	PRICE CUR PER UOP	TOTAL CAD
0010	ALREC00023	**1 PC**	**198.45 CAD**	**198.45**
	6061 - T6511 Aluminum Extruded	**84.672 LB**	**1 PC**	
	Rectangular			
	1.00000 (+ -.012) X 6.0000 (+ -.044) X 144			
	Mill Length			
	ASTM B 221|2008 ROHS COMPLIANT SAE			
	AMS-QQ-A-200/8|1997 Nominal			
	Chemistry/Act Physical			
	Standard Packaging			
	Fuel/Energy Surchrg			7.60
	Item total:			**206.05**
0020	ALREC00328	**1 PC**	**99.50 CAD**	**99.50**
	6061 - T6511 Aluminum Extruded	**42.336 LB**	**1 PC**	
	Rectangular			
	0.50000 (+ -.009) X 6.0000 (+ -.044) X 144			
	Mill Length			
	ASTM B 221|2008 ROHS COMPLIANT SAE			
	AMS-QQ-A-200/8|1997 Nominal			
	Chemistry/Act Physical			
	Standard Packaging			
	Fuel/Energy Surchrg			7.60
	Item total:			**107.10**

ThyssenKrupp Materials NA
Copper and Brass Sales Division

ThyssenKrupp

ThyssenKrupp Materials NA, 19044 95A Avenue, Surrey, BC, V4N 4P2

AERO DESIGN LTD.
2013 39 AVE NE
CALGARY AB T2E 6R7
Canada

QUOTE

DATE: 03/30/2011
QUOTE NO: 1200293245
YOUR INQUIRY:
ATTENTION TO: Steven Fahey
TEL: 403-250-8027

ITEM	DESCRIPTION	QTY1 UOM QTY2 UOM QTY3 UOM	PRICE CUR PER UOP	TOTAL CAD
0030	ALREC00872	**1 PC**	**124.35 CAD**	**124.35**
	6061 - T6511 Aluminum Extruded Rectangular 0.75000 (+ -.010) X 5.0000 (+ -.034) X 144 Mill Length ASTM B 221|2008 ROHS COMPLIANT SAE AMS-QQ-A-200/8|1997 Nominal Chemistry/Act Physical Standard Packaging	**52.920 LB**	**1 PC**	
	Fuel/Energy Surchrg			7.60
	Item total:			**131.95**
0040	ALREC00882	**10 PC**	**15.10 CAD**	**151.00**
	6061 - T6511 Aluminum Extruded Rectangular 0.50000 (+ -.009) X 0.7500 (+ -.010) X 144 Mill Length ASTM B 221|2008 ROHS COMPLIANT SAE AMS-QQ-A-200/8|1997 Nominal Chemistry/Act Physical Standard Packaging	**52.920 LB**	**1 PC**	
	Fuel/Energy Surchrg			7.60
	Item total:			**158.60**
0050	ALSQ00030	**4 PC**	**354.35 CAD**	**1,417.40**
	6061 - T6511 Aluminum Extruded Square 3.50000 " (+ -.024) X 144 Mill Length ASTM B 221|2008 ROHS COMPLIANT SAE AMS-QQ-A-200/8|1997 Nominal Chemistry/Act Physical Standard Packaging	**691.488 LB**	**1 PC**	
	Fuel/Energy Surchrg			7.60
	Item total:			**1,425.00**

3'14 requested
changed to 3.0

Weight total 924.336 LB

Copper and Brass Sales
22355 W 11 Mile Road
Southfield, MI 48033

ThyssenKrupp Materials NA
Copper and Brass Sales Division

ThyssenKrupp

ThyssenKrupp Materials NA, 19044 95A Avenue, Surrey, BC, V4N 4P2

AERO DESIGN LTD.
2013 39 AVE NE
CALGARY AB T2E 6R7
Canada

QUOTE

DATE: 03/30/2011
QUOTE NO: 1200293245
YOUR INQUIRY:
ATTENTION TO: Steven Fahey
TEL: 403-250-8027

Items total	2,028.70
Net Amount	**2,028.70**
GST	101.44
TOTAL	**2,130.14**

Payment Terms: Within 30 days without deduction
Delivery Terms: PPD Prepaid Prepaid
Shipping Condition: General Delivery

COMPUTER GENERATED OFFER AND VALID WITHOUT SIGNATURE.

Please review the above items for accuracy.
Prices are quoted as price in effect at time of shipment.
Our standard terms and conditions apply should this quote become an order.
For terms and conditions please refer to website at **www.copperandbrass.com**
Any obvious damage must be noted on the material delivery documentation at the time of receipt.
Tax exemption status documentation must be forwarded to credit department prior to order approval.
All returned material subject to restock charge

Copper and Brass Sales
22355 W 11 Mile Road
Southfield, MI 48033

ThyssenKrupp Materials NA
Copper and Brass Sales Division

ThyssenKrupp

QUOTE

ThyssenKrupp Materials NA, 19044 95A Avenue, Surrey, BC, V4N 4P2

AERO DESIGN LTD.
2013 39 AVE NE
CALGARY AB T2E 6R7
Canada

TEL: 403-250-8027
FAX: 403-250-8333

DATE: 03/30/2011
QUOTE NO: 1200293258
YOUR INQUIRY:
ATTENTION TO: Steven Fahey
TEL: 403-250-8027
CUSTOMER NO: 10016771
DEPARTMENT: CAN VAN INS 01
CONTACT: Timothy Skidmore
TEL: 800-926-2600
FAX: 888-926-2600
EMAIL: timothy.skidmore@thyssenkrupp.com

Thank you for allowing us to quote on your requirement. Delivery contingent upon date ordered.

Delivery Address
AERO DESIGN LTD., 2013 39 AVE NE, CALGARY, AB T2E 6R7, CANADA
Unloading Point: Unload Point 1

Earliest Delivery Date: **04/08/2011**

ITEM	DESCRIPTION	QTY1 UOM QTY2 UOM QTY3 UOM	PRICE CUR PER UOP	TOTAL CAD
0010	ALSQ00115	**4 PC**	**273.10 CAD**	**1,092.40**
	6061 - T6511 Aluminum Extruded Square	**508.032 LB**	**1 PC**	
	3.00000 " (+ -.024) X 144 Mill Length			
	ASTM B 221|2008 ROHS COMPLIANT SAE			
	AMS-QQ-A-200/8|1997 Nominal			
	Chemistry/Act Physical			
	Standard Packaging			
	Fuel/Energy Surchrg			7.60
	Weight total	508.032 LB		
	Items total			1,100.00
	Net Amount			**1,100.00**
	GST			55.00
	TOTAL			**1,155.00**

Payment Terms: Within 30 days without deduction
Delivery Terms: PPD Prepaid Prepaid
Shipping Condition: General Delivery

COMPUTER GENERATED OFFER AND VALID WITHOUT SIGNATURE.

ThyssenKrupp Materials NA
Copper and Brass Sales Division

ThyssenKrupp

ThyssenKrupp Materials NA, 19044 95A Avenue, Surrey, BC, V4N 4P2

AERO DESIGN LTD.
2013 39 AVE NE
CALGARY AB T2E 6R7
Canada

QUOTE

DATE: 03/30/2011
QUOTE NO: 1200293258
YOUR INQUIRY:
ATTENTION TO: Steven Fahey
TEL: 403-250-8027

Please review the above items for accuracy.
Prices are quoted as price in effect at time of shipment.
Our standard terms and conditions apply should this quote become an order.
For terms and conditions please refer to website at **www.copperandbrass.com**
Any obvious damage must be noted on the material delivery documentation at the time of receipt.
Tax exemption status documentation must be forwarded to credit department prior to order approval.
All returned material subject to restock charge

Copper and Brass Sales
22355 W 11 Mile Road
Southfield, MI 48033

ThyssenKrupp Materials NA
Copper and Brass Sales Division

ThyssenKrupp

ThyssenKrupp Materials NA 19044 95A Avenue, Surrey, BC V4N 4P2

DELIVERY NOTE

AERO DESIGN LTD.
2013 39 AVE NE
CALGARY AB T2E 6R7

DATE:	04/07/2011
DOC. NO:	2401195735*
ORDER NO:	1400775254
YOUR P/O:	11038
CUSTOMER NO:	10016771
Route:	**B8MC2**
CONTACT:	Timothy Skidmore
TEL:	800-926-2600
FAX:	888-926-2600
EMAIL:	timothy.skidmore@thyssenkrupp.com

* please state on all documents

SHIP TO: 2013-39TH AVENUE N.E.
SHIP TO: CALGARY, AB, T2E 6R7

We deliver at your own risk and account in accordance with our general delivery and payment terms.

ITEM	DESCRIPTION	NET QTY1 / QTY2	PACKAGE NO.
0010	ALSQ00115	4 PC	1001611605
	6061 - T6511 Aluminum Extruded Square	514 lb	
	3.00000 " (+ -.024) X 144 Mill Length		
	ASTM B 221|2008 ROHS COMPLIANT SAE AMS-QQ-A-200/8|1997		
	Nominal Chemistry/Act Physical		
	Standard Packaging		
	Customer Order No: 11038		

Tag	Qty	UOM	Vendor	Vend PO	Heat/Lot	PCS
2000264637	4	PC			20703564	4

Total Gross Weight **516 lb**

All items, not declared as partial delivery, are final quantities.
Delivery Terms: PPD gem. Incoterms 2000 Prepaid

CERTIFICATION OF COMPLIANCE

We hereby certify that mercury or any of its compounds are not used in the processing and distribution of our products. The products we distribute are not hazardous in their received state.

For MSDS sheets go to www.copperandbrass.com/msds or call 248-233-5862. We hereby certify that the material above complies with the above specifications

Rush D. Williams - Director Quality Improvement Board

Rush D. Williams

Copper and Brass Sales
22355 W 11 Mile Road
Southfield, MI 48033

FORM: 1002 WORK ORDER: 2401195735

COPPER AND BRASS SALES

MATERIAL TYPE

ALUMINIUM ALLOYS

PRODUCT DESIGNATION

1100 1350 3003 3004 3105 5005 5083 5086 5182 5454 6061 6063

"WARNING"

SMALL CHIPS, FINE TURNINGS AND DUST MAY IGNITE READILY. EXPLOSIONPOTENTIAL MAY BE PRESENT WHEN:DUST OR FINES ARE DISPERSED IN THE AIR; FINE, DUST OR MOLTEN ALUMINUMARE IN CONTACT WITH CERTAINMETAL OXIDES; OR, CHIPS, FINES, DUST OR MOLTEN ALUMINUM ARE IN CONTACT WITH WATER OR MOISTURE. KEEP AWAY FROM IGNITION SOURCE. USE EXPLOSION- PROOF VENTILATION. KEEP MATERIAL DRY.

INHALING LARGE AMOUNTS OF COPPER, MAGNESIUM OXIDE, MANGANESE OXIDE, AND ZINC OXIDE FUMES OR DUST MAY CAUSE METAL FUME FEVER WITH FLU-LIKE SYMPTOMS. CHRONIC OVEREXPOUSURE TO COPPER MAY CAUSE THICKENING OF THE SKIN; AND SKIN,TEETH,AND HAIR DISCOLORATION. CHRONIC OVEREXPOUSURE TO MANGANESE DUST CAN CAUSE CENTRAL NERVOUS SYSTEM DAMAGE,SCARRING OF THE LUNGS AND REPRODUCTIVE HARM IN MALES.TARGET ORGAN IS PRIMARILY THE LUNG,BUT REPEATED HIGH EXPOSURE CAN ALSO AFFECT THE LIVER.CHRONIC OVEREXPOSURE TO TIN DUST OR IRON OXIDE DUST/FUME MAY CAUSE LUNG SIDEROSIS.CHRONIC OVEREXPOUSURE TO SILICON DUST CAN CAUSE CHRONIC BRONCHITIS.

THIS PRODUCT ALSO CONTAINS LEAD AND CHROMIUM COMPOUNDS.LEAD IS KNOWN TO CAUSE REPRODUCTIVE TOXICITY AND IS A KNOWN CARCINOGEN.EXPOSURE TO CHROMIUM DUST OR FUME MAY CAUSE METAL FUME FEVER WITH FLU-LIKE SYMPTOMS AND KIDNEY AND KIDNEY AND LIVER DAMAGE.UNDER HIGH TEMPERATURES,HEXAVALENT CHROMIUM MAY BE PRODUCED,IF INTHE INSOLUBLE FORM,IT IS A CONFIRMED HUMAN CARCINOGEN. (CALIFORNIA PROPOSITION 65). IF COATED WITH OIL,MAY CAUSE SKIN IRRITATION/DERMATITIS BY CONTACT. WELDING FUME IS LISTED AS A POSSIBLE CARCINOGENIC TO HUMANS.READ THE ALUMINUM/ALUMINUM ALLOYS MATERIAL SAFETY DATA SHEET(MSDS) ON FILE WITH YOUR EMPLOYER BEFORE WORKING WITH THIS MATERIAL.

*** If processing or recycling produces particulate,use exhaust ventilation or other controls designed to prevent exposure to workers. Examples of such activities include melting, welding,grinding,abrasive sawing,sanding and polishing.Any activity which abrades the surface of this material can generate airborne particulate.Use appropriate NIOSH approved respiratory protection (P95; P100 for lead with, quantitative fit testing required) if exposures exceed the permissible limits.**
*** The Occupational Safety and Health Administration (OSHA) have set mandatory limits on occupational exposures.**
*** Aluminum, in solid form and as contained in finished products presents no special health risk.**
*** Sold for manufacturing purposes only.This product can be recycled; contact your sales representative.**

The Occupational Safety and Health Administration require employers to provide training in the proper use of this product.

For additional information, call or write to Copper and Brass Sales,22355 West Eleven Mile Road, Southfield, MI 48033,telephone248-233-5600, or visit our web site @ www.copperandbrass.com.

ALUMINUM LABEL NO.300-1088 ISSUED 10/01/2008

sapa:

Sapa Industrial Extrusions
1550 KIRBY LANE
--
SPANISH FORK, UT
84660

Sapa Extrusions Inc., a Subsidiary of Sapa AB

Certified Inspection Report

Cert Number	Page
SAPA361490	Page 1 of 2

Sales Order Number	Line No.	Customer P/O	Cert Creation Date	Cert Print Date
1100306480	2	5400097260-2	13-MAR-11	13-MAR-11

Invoice To Customer

THYSSENKRUPP MATERIALS CA LTD
COPPER & BRASS SALES
ACCOUNTS PAYABLE
P.O. BOX 5116
SOUTHFIELD, MI - 48086-5116

Ship To Customer

THYSSENKRUPP MATERIALS CA LTD
COPPER & BRASS SALES CANADA
19044 95A AVE
--
SURREY, BC - V4N 4P2

Quantity Shipped	Date Shipped	Item Description	Specification
1027 LB	13-MAR-11	Extruded ACCU-BAR 3.000 TK x 3.000 W TK TOL +.024/-.000 W TOL +.024/-.000 SECT 550603 144.000 IN LN FIN M-MILL W/F 10.668 F 1 CS 4.23 6061/T6511H Marking CONTINUOUS;	ASTMB221 REV 08 IS-AUB REV AMS-QQ-A-200/8 REV Meets 6061-T6511H, 6061-T6511 REV
B/L	**Item No.**		
208872	G03211223		
Delivery Id	**Item No. Rev**		
4189562	--		
CustomerPart No.			
ALSQ00115			

Applicable Specifications, Revisions and Exceptions

ACC-U-BAR
COMPOSITION NOTE: The values for 'Others Each' and 'Others Total' have met the limits as shown on this certified inspection report. Remainder is Aluminum.

Legal Statement

We hereby certify that, unless otherwise indicated, the material covered by this report has been manufactured, inspected, and tested in accordance with, and has been found to meet, the applicable requirements described herein, including any specifications forming a part of the description and that samples representative of the material met the composition and had the mechanical properties shown on the face of this certification. Also, note that mercury is not a normal contaminant in aluminum alloys and neither it nor any of its compounds are used in the manufacture of our product. This certification is not to be reproduced in partial form without prior written approval of our Quality Assurance Dept.

Signature And Title

D. Wade Bishop

Wade Bishop — 13-MAR-11
Quality Control Manager

These certifications are for:
Delivery #: 3401195136
Date: 5-3-2011
Qty: 4PC
By: Araceli Robles
Quality check

Quantities per Lot / Packages

Package Number	Lot Number	Quantity	UOM	Weight	
				Gross	Net
G14-PKG1184221	20703564	8	PCS	1033	1027

Composition Limits

Alloy	Si		Fe		Cu		Mn		Mg		Cr		Zn	
	Min	Max	Min	Max	Min	Max	Min	Max	Min	Max	Min	Max	Min	Max
6061	0.40	0.80	---	0.70	0.15	0.40	---	0.15	0.80	1.20	0.04	0.35	---	0.25

sapa:

Sapa Industrial Extrusions
1550 KIRBY LANE
--
SPANISH FORK, UT
84660

Certified Inspection Report

Cert Number	Page
SAPA361490	Page 2 of 2

Sales Order Number	Line No.	Customer P/O	Cert Creation Date	Cert Print Date
1100306480	2	5400097260-2	13-MAR-11	13-MAR-11

Alloy	Ti		Others Each		Others Total	
	Min	Max	Min	Max	Min	Max
6061	---	0.15	---	0.05	---	0.15

Composition Results

Heat / Cast	Si	Fe	Cu	Mn	Mg	Cr	Zn	Ti	Others Each	Others Total
S11022605	0.68	0.44	0.31	0.07	0.92	0.06	0.11	0.03	--	--

Mechanical Property - Test Limits

Test Type			UTS - L		TYS - L		EL 4D-Long	
UOM			KSI		KSI		PCT	
# of Test			--		--		--	
Test Temper	Lot Number	# of Tests	MIN Value	MAX Value	MIN Value	MAX Value	MIN Value	MAX Value
T6511H	20703564	1	46.1	46.1	40.1	40.1	17.0	17.0

Cert Notes

Material manufactured to T6511 specifications also meets T6 requirements.

All elements are represented in the chemical analysis section. The remainder is Aluminum.

All alloys produced at Sapa Industrial Extrusions comply with 0.4% maximum lead per RoHS, with the exception of 6262 alloy

In accordance with EN 10204, Test Report Type 2.2 and Certificate Type 3.1

Material produced in compliance to EN 10204 3.1

Melted and Manufactured in the USA

Made in USA

ThyssenKrupp Materials NA
Copper and Brass Sales Division

ThyssenKrupp

ThyssenKrupp Materials NA 19044 95A Avenue, Surrey, BC V4N 4P2

DELIVERY NOTE

AERO DESIGN LTD.
2013 39 AVE NE
CALGARY AB T2E 6R7

DATE:	04/07/2011
DOC. NO:	2401196198*
ORDER NO:	1400775261
YOUR P/O:	11038
CUSTOMER NO:	10016771
Route:	**B8MO8**
CONTACT:	Timothy Skidmore
TEL:	800-926-2600
FAX:	888-926-2600
EMAIL:	timothy.skidmore@thyssenkrupp.com

* please state on all documents

SHIP TO: 2013-39TH AVENUE N.E.
SHIP TO: CALGARY, AB, T2E 6R7

We deliver at your own risk and account in accordance with our general delivery and payment terms.

ITEM	DESCRIPTION	NET QTY1 / QTY2	PACKAGE NO.
0010	ALREC00882	10 PC	1001612735
	6061 - T6511 Aluminum Extruded Rectangular	52.761 lb	
	0.50000 (+ -.009) X 0.7500 (+ -.010) X 144 Mill Length		
	ASTM B 221|2008 ROHS COMPLIANT SAE AMS-QQ-A-200/8|1997		
	Nominal Chemistry/Act Physical		
	Standard Packaging		
	Customer Order No: 11038		

Tag	Qty	UOM	Vendor	Vend PO	Heat/Lot	PCS
1000854103	6	PC	SIERRA ALU	5400045817	140005-2/1A	6
2000264957	4	PC			20715697	4

Total Gross Weight **54.761 lb**

All items, not declared as partial delivery, are final quantities.
Delivery Terms: PPD gem. Incoterms 2000 Prepaid

CERTIFICATION OF COMPLIANCE

We hereby certify that mercury or any of its compounds are not used in the processing and distribution of our products. The products we distribute are not hazardous in their received state.

For MSDS sheets go to www.copperandbrass.com/msds or call 248-233-5862. We hereby certify that the material above complies with the above specifications

Rush D. Williams - Director Quality Improvement Board

Rush D. Williams

Copper and Brass Sales
22355 W 11 Mile Road
Southfield, MI 48033

FORM: 1002 WORK ORDER: 2401196198

COPPER AND BRASS SALES

MATERIAL TYPE

ALUMINIUM ALLOYS

PRODUCT DESIGNATION

1100 1350 3003 3004 3105 5005 5083 5086 5182 5454 6061 6063

"WARNING"

SMALL CHIPS, FINE TURNINGS AND DUST MAY IGNITE READILY. EXPLOSIONPOTENTIAL MAY BE PRESENT WHEN:DUST OR FINES ARE DISPERSED IN THE AIR; FINE, DUST OR MOLTEN ALUMINUMARE IN CONTACT WITH CERTAINMETAL OXIDES; OR, CHIPS, FINES, DUST OR MOLTEN ALUMINUM ARE IN CONTACT WITH WATER OR MOISTURE. KEEP AWAY FROM IGNITION SOURCE. USE EXPLOSION- PROOF VENTILATION. KEEP MATERIAL DRY.

INHALING LARGE AMOUNTS OF COPPER, MAGNESIUM OXIDE, MANGANESE OXIDE, AND ZINC OXIDE FUMES OR DUST MAY CAUSE METAL FUME FEVER WITH FLU-LIKE SYMPTOMS. CHRONIC OVEREXPOUSURE TO COPPER MAY CAUSE THICKENING OF THE SKIN; AND SKIN,TEETH,AND HAIR DISCOLORATION. CHRONIC OVEREXPOUSURE TO MANGANESE DUST CAN CAUSE CENTRAL NERVOUS SYSTEM DAMAGE,SCARRING OF THE LUNGS AND REPRODUCTIVE HARM IN MALES.TARGET ORGAN IS PRIMARILY THE LUNG,BUT REPEATED HIGH EXPOSURE CAN ALSO AFFECT THE LIVER.CHRONIC OVEREXPOSURE TO TIN DUST OR IRON OXIDE DUST/FUME MAY CAUSE LUNG SIDEROSIS.CHRONIC OVEREXPOUSURE TO SILICON DUST CAN CAUSE CHRONIC BRONCHITIS.

THIS PRODUCT ALSO CONTAINS LEAD AND CHROMIUM COMPOUNDS.LEAD IS KNOWN TO CAUSE REPRODUCTIVE TOXICITY AND IS A KNOWN CARCINOGEN.EXPOSURE TO CHROMIUM DUST OR FUME MAY CAUSE METAL FUME FEVER WITH FLU-LIKE SYMPTOMS AND KIDNEY AND KIDNEY AND LIVER DAMAGE.UNDER HIGH TEMPERATURES,HEXAVALENT CHROMIUM MAY BE PRODUCED,IF INTHE INSOLUBLE FORM,IT IS A CONFIRMED HUMAN CARCINOGEN. (CALIFORNIA PROPOSITION 65). IF COATED WITH OIL,MAY CAUSE SKIN IRRITATION/DERMATITIS BY CONTACT. WELDING FUME IS LISTED AS A POSSIBLE CARCINOGENIC TO HUMANS.READ THE ALUMINUM/ALUMINUM ALLOYS MATERIAL SAFETY DATA SHEET(MSDS) ON FILE WITH YOUR EMPLOYER BEFORE WORKING WITH THIS MATERIAL.

*** If processing or recycling produces particulate,use exhaust ventilation or other controls designed to prevent exposure to workers. Examples of such activities include melting, welding,grinding,abrasive sawing,sanding and polishing.Any activity which abrades the surface of this material can generate airborne particulate.Use appropriate NIOSH approved respiratory protection (P95; P100 for lead with, quantitative fit testing required) if exposures exceed the permissible limits.**
*** The Occupational Safety and Health Administration (OSHA) have set mandatory limits on occupational exposures.**
*** Aluminum, in solid form and as contained in finished products presents no special health risk.**
*** Sold for manufacturing purposes only.This product can be recycled; contact your sales representative.**

The Occupational Safety and Health Administration require employers to provide training in the proper use of this product.

For additional information, call or write to Copper and Brass Sales,22355 West Eleven Mile Road, Southfield, MI 48033,telephone248-233-5600, or visit our web site @ www.copperandbrass.com.

Sierra Aluminum Company
2345 Fleetwood Drive, Riverside, CA 92509
(951) 781-7800 . Fax (951) 781-7864

MATERIAL CERTIFICATION

Certification No.: 140005-2/1A

Date: 1/27/2010

Sold To:	**Shipped To:**
COPPER & BRASS SALES P.O. BOX 5116 SOUTHFIELD, MI 48086	COPPER & BRASS SALES > 5441 NE 148TH AVE STE 106 PORTLAND, OR 97230

P.O. No.	Sales Order-Item	Part No.	Description	Die No.
5400045817-R05	140005-2/1A	ALREC00882	.500x.750Bar	610041

Material Specification	Testing Method	Alloy-Temper
ASTM B221-06, AMS-QQ-A-200/8, ASME-SB-221	ASTM B557-02a	6061-T6511

CHEMICAL PROPERTIES FOR 6061 ALLOY

	SI	FE	CU	MN	MG	CR	ZN	TI	Other elements each	Other elements total	AL
Minimum	.40	—	.15	—	.80	.04	—	—	—	—	Rem.
Maximum	.80	.70	.40	.15	1.20	.35	.25	.15	.05	.15	

MECHANICAL PROPERTIES

Cast No.	No. of Tests *	Strength psi Yield ** Min.	Strength psi Yield ** Max.	Strength psi Tensile Min.	Strength psi Tensile Max.	Elong % in 2" or 4D Min.	Elong % in 2" or 4D Max.
100120-03	1	41779	41779	45376	45376	19	19
Requirements		35000		38000		10	

EQUIPMENT	Tensile	Extensometer	Spectrometer
MODEL	SATEC33EMF	T1M-2501	ARLQA137
CALIBRATED ON	9/9/2009	9/9/2009	12/17/2009
DUE ON	3/9/2010	3/9/2010	6/17/2010

We hereby certify that the aluminum extrusion covered by this report has been inspected and tested in accordance with our standard sampling plan or the requirements of any specifications of the material described in this report. The material has been found to meet the applicable requirements described herein. The samples, representative of the material, met the composition limits and had the mechanical properties shown. Also, note that Mercury is not a normal contaminant in aluminum alloys. Neither Mercury nor any of its compounds are used in the manufacture of our extrusions. Melted and manufactured in Fontana/Riverside, California U.S.A.

Authorized Signature ______________________
Mitchell A. Coe, Quality Service Representative

*When 2 or more tests are made, the highest and lowest values are reported.
**Yield strength is determined by the 0.2% offset method.

Sapa Industrial Extrusions
1550 KIRBY LANE
--
SPANISH FORK, UT
84660

Sapa Extrusions Inc., a Subsidiary of Sapa AB

Certified Inspection Report

Cert Number	Page
SAPA368237	Page 1 of 2

Sales Order Number	Line No.	Customer P/O	Cert Creation Date	Cert Print Date
1100312850	2	5400099115-02	27-MAR-11	27-MAR-11

Invoice To Customer

COPPER & BRASS SALES INC
ATTN: ACCOUNTS PAYABLE
P.O. BOX 5116
--
SOUTHFIELD, MI - 48086

Ship To Customer

COPPER & BRASS SALES INC
5441 NE 148th Ave.
Suite 106
--
PORTLAND, OR - 97230

Quantity Shipped	Date Shipped	Item Description	Specification
528 LB	27-MAR-11	Extruded Rectangular Bar 0.500 TK x 0.750 W RAD 144.000 IN LN FIN M-MILL W/F 0.441 F 06 CS .9 6061/T6511 Marking CONTINUOUS;	ASTMB221 REV 08 AMS-QQ-A-200/8 REV ASMESB221 REV 09 UNS#A96061 REV
B/L	**Item No.**		
212838	G03361754		
Delivery Id	**Item No. Rev**		
4194542	--		
CustomerPart No.			
ALREC00882			

Applicable Specifications, Revisions and Exceptions

COMPOSITION NOTE: The values for 'Others Each' and 'Others Total' have met the limits as shown on this certified inspection report. Remainder is Aluminum.

Legal Statement

We hereby certify that, unless otherwise indicated, the material covered by this report has been manufactured, inspected, and tested in accordance with, and has been found to meet, the applicable requirements described herein, including any specifications forming a part of the description and that samples representative of the material met the composition and had the mechanical properties shown on the face of this certification. Also, note that mercury is not a normal contaminant in aluminum alloys and neither it nor any of its compounds are used in the manufacture of our product. This certification is not to be reproduced in partial form without prior written approval of our Quality Assurance Dept.

Signature And Title

D. Wade Bishop

Wade Bishop 27-MAR-11
Quality Control Manager

Quantities per Lot / Packages

Package Number	Lot Number	Quantity	UOM	Weight	
				Gross	Net
G14-PKG1184540	20715697	101	PCS	532	528

Composition Limits

Alloy	Si		Fe		Cu		Mn		Mg		Cr		Zn	
	Min	Max	Min	Max	Min	Max	Min	Max	Min	Max	Min	Max	Min	Max
6061	0.40	0.80	---	0.70	0.15	0.40	---	0.15	0.80	1.20	0.04	0.35	---	0.25

Sapa Industrial Extrusions
1550 KIRBY LANE
--
SPANISH FORK, UT
84660

Certified Inspection Report

Cert Number	Page
SAPA368237	Page 2 of 2

Sales Order Number	Line No.	Customer P/O	Cert Creation Date	Cert Print Date
1100312850	2	5400099115-02	27-MAR-11	27-MAR-11

Alloy	Ti		Others Each		Others Total	
	Min	Max	Min	Max	Min	Max
6061	---	0.15	---	0.05	---	0.15

Composition Results

Heat / Cast	Si	Fe	Cu	Mn	Mg	Cr	Zn	Ti	Others Each	Others Total
S11030704	0.64	0.32	0.25	0.05	0.91	0.05	0.06	0.02	--	--

Mechanical Property - Test Limits

		Test Type	UTS - L		TYS - L		EL 4D-Long	
		UOM	KSI		KSI		PCT	
		# of Test	--		--		--	
Test Temper	Lot Number	# of Tests	MIN Value	MAX Value	MIN Value	MAX Value	MIN Value	MAX Value
T6511	20715697	3	43.8	46.5	39.4	42.7	20.0	22.5

Cert Notes

Material manufactured to T6511 specifications also meets T6 requirements.

All elements are represented in the chemical analysis section. The remainder is Aluminum.

All alloys produced at Sapa Industrial Extrusions comply with 0.4% maximum lead per RoHS, with the exception of 6262 alloy

In accordance with EN 10204, Test Report Type 2.2 and Certificate Type 3.1

Material produced in compliance to EN 10204 3.1

Melted and Manufactured in the USA

Made in USA

ThyssenKrupp Materials NA
Copper and Brass Sales Division

ThyssenKrupp

ThyssenKrupp Materials NA 19044 95A Avenue, Surrey, BC V4N 4P2

DELIVERY NOTE

AERO DESIGN LTD.
2013 39 AVE NE
CALGARY AB T2E 6R7

DATE:	04/07/2011
DOC. NO:	2401201771*
ORDER NO:	1400775261
YOUR P/O:	11038
CUSTOMER NO:	10016771
Route:	**B8MB9**
CONTACT:	Timothy Skidmore
TEL:	800-926-2600
FAX:	888-926-2600
EMAIL:	timothy.skidmore@thyssenkrupp.com

* please state on all documents

SHIP TO: 2013-39TH AVENUE N.E.
SHIP TO: CALGARY, AB, T2E 6R7

We deliver at your own risk and account in accordance with our general delivery and payment terms.

ITEM	DESCRIPTION	NET QTY1 / QTY2	PACKAGE NO.
0010	ALREC00023 6061 - T6511 Aluminum Extruded Rectangular 1.00000 (+ -.012) X 6.0000 (+ -.044) X 144 Mill Length ASTM B 221|2008 ROHS COMPLIANT SAE AMS-QQ-A-200/8|1997 Nominal Chemistry/Act Physical Standard Packaging Customer Order No: 11038	1 PC 84.667 lb	1001623174
0020	ALREC00328 6061 - T6511 Aluminum Extruded Rectangular 0.50000 (+ -.009) X 6.0000 (+ -.044) X 144 Mill Length ASTM B 221|2008 ROHS COMPLIANT SAE AMS-QQ-A-200/8|1997 Nominal Chemistry/Act Physical Standard Packaging Customer Order No: 11038	1 PC 42.333 lb	
0030	ALREC00872 6061 - T6511 Aluminum Extruded Rectangular 0.75000 (+ -.010) X 5.0000 (+ -.034) X 144 Mill Length ASTM B 221|2008 ROHS COMPLIANT SAE AMS-QQ-A-200/8|1997 Nominal Chemistry/Act Physical Standard Packaging Customer Order No: 11038	1 PC 53.300 lb	1001623174

Tag	Qty	UOM	Vendor	Vend PO	Heat/Lot	PCS
1001629735	1	PC	KAISER ALU	5400095647	65026 043	1
1001629774	1	PC	KAISER ALU	5400095239	65020 042	1
1001623028	1	PC			201101639	1

Total Gross Weight **182.300 lb**

All items, not declared as partial delivery, are final quantities.

Copper and Brass Sales
22355 W 11 Mile Road
Southfield, MI 48033

ThyssenKrupp Materials NA
Copper and Brass Sales Division

ThyssenKrupp

ThyssenKrupp Materials NA 19044 95A Avenue, Surrey, BC V4N 4P2

DELIVERY NOTE

AERO DESIGN LTD.
2013 39 AVE NE
CALGARY AB T2E 6R7

DATE:	04/07/2011
DOC. NO:	2401201771*
ORDER NO:	1400775261
YOUR P/O:	11038
CUSTOMER NO:	10016771
Route:	**B8MB9**
CONTACT:	Timothy Skidmore
TEL:	800-926-2600
FAX:	888-926-2600
EMAIL:	timothy.skidmore@thyssenkrupp.com

* please state on all documents

Delivery Terms: PPD gem. Incoterms 2000 Prepaid

CERTIFICATION OF COMPLIANCE

We hereby certify that mercury or any of its compounds are not used in the processing and distribution of our products. The products we distribute are not hazardous in their received state.

For MSDS sheets go to www.copperandbrass.com/msds or call 248-233-5862. We hereby certify that the material above complies with the above specifications

Rush D. Williams - Director Quality Improvement Board

Rush D. Williams

Copper and Brass Sales
22355 W 11 Mile Road
Southfield, MI 48033

KAISER ALUMINUM
FABRICATED PRODUCTS

Best in Class

CERTIFIED TEST REPORT

http://Certs.KaiserAluminum.com

KAISER ALUMINUM
FABRICATED PRODUCTS, LLC
6250 EAST BANDINI BLVD
LOS ANGELES, CA 90040-3168

CUSTOMER PO NUMBER:	CUSTOMER PART NUMBER:	PRODUCT DESCRIPTION:
5400095647-20	ALREC00023	1 X 6 PREC WIDE BAR

KAISER ORDER NUMBER:	LINE ITEM:	SHIP DATE:	KAISER LOT NUMBER:	ALLOY:	TEMPER:
5003697	020	03/11/2011	65026 043	6061	T6511B
WEIGHT SHIPPED:	**QUANTITY:**	**B/L NUMBER:**	**DIAM/DAF/THKNS:**	**WIDTH:**	**LENGTH:**
508.000 LB	6.000 PCS	526545			12.000 FT

SHIP TO:	SOLD TO:
THYSSENKRUPP MATERIALS NA COPPER & BRASS SALES DIVISION 19044 95A AVENUE SURREY, CA CANADA, V4N 4P2 CANADA	COPPER & BRASS SALES PO BOX 5116 SOUTHFIELD, MI 48086-5116 USA

Actual Physical Properties

REFERENCE	DASH#	SAMPLE#	UTS(KSI)	YTS(KSI)	ELONG%	HARDNESS	CONDUCT.	BEND
65026 043	0001	0001	53.4	42.6	18.4	RE 98	N/A	N/A

Chemical Composition (wt%), Aluminum Remainder

LIMITS	Si	Fe	Cu	Mn	Mg	Cr	Zn	Ti	Pb	Bi	Zr	Ea	Tot
Maximum	0.8	0.7	0.40	0.15	1.2	0.35	0.25	0.15	NA	NA	NA	0.05	0.15
Minimum	0.40		0.15		0.8	0.04			NA	NA	NA		

Applicable Requirements:

PER ASTM-B221-08, STENCILED ASME-SB221 1998 SECT II PER AMS-QQ-A-200/8 UNS#6061 MEETS ALL SPECIFICATION REQUIREMENTS FOR 6061-T6511/T6 ELEVATED MINIMUM MECHANICAL PROPERTIES AS FOLLOWS: UTS = 42.0 KSI MIN YIELD = 38.0 KSI MIN ELONGATION = 10.0% MIN

Miscellaneous Notes

MANUFACTURED IN USA MELTED IN USA

CERTIFICATION

Kaiser Aluminum Fabricated Products, LLC hereby certifies that metal shipped under this order has been inspected and tested and found in conformance with applicable specifications forming a part of the description set forth in Kaiser's sales acknowledgement form. Any warranty is limited to that shown on Kaiser's general terms and conditions of sale. Test reports are on file, subject to examination.

Mark Shelley, Quality Manager

Mark Shelley

Plant Serial: 00202622

Kaiser Order Number: 5003697

Line Item: 020

KAISER ALUMINUM
FABRICATED PRODUCTS

Best in Class

CERTIFIED TEST REPORT

http://Certs.KaiserAluminum.com

KAISER ALUMINUM
FABRICATED PRODUCTS, LLC
6250 EAST BANDINI BLVD
LOS ANGELES, CA 90040-3168

CUSTOMER PO NUMBER:	CUSTOMER PART NUMBER:	PRODUCT DESCRIPTION:
5400095239-10	ALREC00328	.500 X 6 PREC WIDE BAR

KAISER ORDER NUMBER:	LINE ITEM:	SHIP DATE:	KAISER LOT NUMBER:	ALLOY:	TEMPER:
5003211	010	03/11/2011	65020 042	6061	T6511B
WEIGHT SHIPPED:	**QUANTITY:**	**B/L NUMBER:**	**DIAM/DAF/THKNS:**	**WIDTH:**	**LENGTH:**
508.000 LB	12.000 PCS	526545			12.000 FT

SHIP TO:	SOLD TO:
THYSSENKRUPP MATERIALS NA COPPER & BRASS SALES DIVISION 19044 95A AVENUE SURREY, CA CANADA, V4N 4P2 CANADA	COPPER & BRASS SALES PO BOX 5116 SOUTHFIELD, MI 48086-5116 USA

Actual Physical Properties

REFERENCE	DASH#	SAMPLE#	UTS(KSI)	YTS(KSI)	ELONG%	HARDNESS	CONDUCT.	BEND
65020 042	0001	0001	47.2	40.6	21.0	RE 96	N/A	N/A
65020 042	0001	0002	47.5	41.3	22.1	RE 97	N/A	N/A
65020 042	0001	0003	48.0	42.5	21.3	RE 97	N/A	N/A

Chemical Composition (wt%), Aluminum Remainder

LIMITS	Si	Fe	Cu	Mn	Mg	Cr	Zn	Ti	Pb	Bi	Zr	Ea	Tot
Maximum	0.8	0.7	0.40	0.15	1.2	0.35	0.25	0.15	NA	NA	NA	0.05	0.15
Minimum	0.40		0.15		0.8	0.04			NA	NA	NA		

Applicable Requirements:

PER ASTM-B221-08, STENCILED ASME-SB221 1998 SECT II PER AMS-QQ-A-200/8 UNS#6061 MEETS ALL SPECIFICATION REQUIREMENTS FOR 6061-T6511/T6 ELEVATED MINIMUM MECHANICAL PROPERTIES AS FOLLOWS: UTS = 42.0 KSI MIN YIELD = 38.0 KSI MIN ELONGATION = 10.0% MIN

Miscellaneous Notes

MANUFACTURED IN USA MELTED IN USA

CERTIFICATION

Kaiser Aluminum Fabricated Products, LLC hereby certifies that metal shipped under this order has been inspected and tested and found in conformance with applicable specifications forming a part of the description set forth in Kaiser's sales acknowledgement form. Any warranty is limited to that shown on Kaiser's general terms and conditions of sale. Test reports are on file, subject to examination.

Mark Shelley, Quality Manager

Mark Shelley

Plant Serial: 00202627

Kaiser Order Number: 5003211

Line Item: 010

SERVICE CENTER METALS
5850 Quality Way
Prince George, VA 23875

CERTIFIED INSPECTION REPORT AND TEST RESULTS FOR EXTRUDED PRODUCTS

OUR ORDER NUMBER	ITEM
122109	7

BILL TO	MANIFEST NUMBER	DIE NUMBER	DATE OF SHIPMENT
Copper & Brass Sales, Inc.	124634	RB0120	2/9/2011
SHIP TO	**CUSTOMER PO**	**ALLOY / TEMPER**	**SALESPERSON**
Copper & Brass Sales, Inc.	5400091959	6061-T6511	Ellis Williams
Quantity Certified 953 lbs 18pcs	**CUSTOMER PART NUMBER** ALREC00872	**DESCRIPTION** SCRB .750x5.000	

CERTIFICATION
ASTM-B221-08 StencilContinuous

SPECIFICATION
AMS-QQA-200/8

We hereby certify *that the material covered by this report has been inspected in accordance with the most recent certification revision, and has been found to meet the applicable requirements described herein, including any specifications forming a part of the description, and that samples representative of the material met the composition limits and had the mechanical properties shown. SCM extrusions are manufactured in the USA from ingot melted and cast in the United States or Canada.*

Items produced and certified as 6061-T6511 also meet the requirements of 6061-T6

Mechanical Properties

Test No.	Lot No.	Test Date	Ultimate Tensile Strength (KSI)	Yield Strength (KSI)	Percent Elongation
1	201101639	02/09/11	49.7	45.4	15.2

Chemical Composition for Alloy 6061

Cast Number	Alloy	Si	Fe	Cu	Mn	Mg	Cr	Zn	Ti	Other: Each Total	Al	Melted In
112103	6061	0.76	0.37	0.33	0.12	0.89	0.08	0.06	0.02			United States of America
C29J0755	6061	0.75	0.39	0.33	0.10	0.87	0.09	0.01	0.01			

Rev. 9/06/07 - UMS

Print Date: 2/9/2011

Calvin J. Wiggins, Director of Quality & Technical Services

AERO Design Ltd.
2013 - 39th Avenue N.E.
Calgary, Alberta, T2E 6R7
Phone: (403) 250-8027
Fax: (403) 250-8333

Purchase Order

P.O. Number	**11035**
Date	15-Mar-11

Vendor:	
Name:	Earle M. Jorgensen (Canada) Inc.
Address:	9451 - 45 Avenue NW, Edmonton AB, T6E 6B9
Phone:	780-801-4015
Fax:	780-463-1215
Attention:	Paul Lopes
Currency:	CAD

Ship To:	
Name:	AERO Design Ltd.
Address:	2013 - 39th Avenue N.E. Calgary, Alberta, T2E 6R7
Phone:	(403) 250-8027
Fax:	(403) 250-8333
Attention:	

ITEM	DESCRIPTION	QTY	RATE	AMOUNT
1	4130 CDS Tubing MIL-T-6736, Cond. N 0.5 x 0.5 x 0.035 - 17/24' R/L	540	5.15	2,781.00
2	4130 CDS Tubing MIL-T-6736, Cond. N 0.75 x 0.75 x 0.035 - 17/24' R/L	500	6.00	3,000.00
		Subtotal		5,781.00
	Sales Tax	GST	5.00%	289.05
		Total	**CAD**	**$6,070.05**

FROM: EARLE M. JORGENSEN (CANADA)INC
6925 8TH STREET NW

EDMONTON

S.I.D. ORDER NO. T150331
ORDERED BY: JEFF CLARKE
PHONE: 403 250-8027
CUST. ORD. NO.: 11035

SOLD TO
AERO DESIGN LIMITED
2013- 39TH AVENUE NORTH EAST
CALGARY
AB T2E 6R7

SHIP TO
AERO DESIGN LIMITED
2013- 39TH AVENUE NORTH EAST
CALGARY
AB T2E 6R7
FAX: 403 2508333
000

PAGE 1 OF 1
M322KPL1
A546500
XFER # 00423
T974714

DATE ORD.	CUSTOMER P.O.	F.O.B.	DEL AREA	VIA	CUST. ACCT.	PROM. DATE
15-MAR-11	11035	DESTIN	CALGARY	OUR TRUCK	230337	25-MAR-11

ORDER WGT.	I/S	TERR.	TYPE	TAX RATE	PPD/COLL	C.O.D.	TEST REPORT	SHIP DATE
144	003 PAUL LOPES		CT		PREPAID	2	0 PRO #	00- -00

*** To be INDIRECT SHIPPED from Branch 00423

105076 4130 CDS TUBING AMS T 6736 COND N:
648.00 FT .500 X .500 X .035 W X 17/24' R/L 648.0000 FT
W/FT 0.2213 EXT WGT: 144
PT# JOB/BTCH# 11035

Best Effort
ll sales subject to US Export Administration Regulations.
lease refer to http://www.emjmetals.com/about/Terms.htm
HEAT # 550726 LOCATION:TRANSFER Y
1 BND
648 FT

The property described below in apparent good order except [illegible] noted (contents and condition of contents unknown) marked, consigned and destined as indicated below, which said carrier, (the word carrier being understood throughout this contract as meaning any person or corporation in possession of the property under the contract) agrees to carry to its usual place of delivery at said destination if on its route, otherwise to deliver to another carrier on the route to said destination it is mutually agreed as to each carrier of all or any of said property over all or any portion of said route to destination and as to each party at any time interested in all or any of said property that every service to be performed hereunder shall be subject to all terms and conditions of the Uniform Domestic Straight Bill of Lading set forth (1) in Official, Southern, Western, and Illinois freight Classification in effect on the date hereof, if this is a rail or rail water shipment, or (2) in the applicable motor carrier classification or tariff if this is a motor carrier shipment.
Shipper hereby certifies that he is familiar with all the terms [illegible] conditions of the said bill of lading, including those on the back thereof, set forth in the classification or tariff which governs the transportation of this shipment and the said terms and conditions are hereby agreed to by the shipper and accepted for himself and his assigns.

RECEIVED ABOVE GOODS IN TERMS AND CONDITIONS APPEARING ON BACK OF INVOICE X	INVOICE AMT.	ADDITIONAL CHARGES	V.A.T. TAX	TAX/AMT.	TOTAL

NO. OF PKGS.	PKG. TYPE	NO. OF PKGS	PKG. TYPE	TOTAL PCS.	DESCRIPTION OF ARTICLES	SHIP WGT.	CLS
1	Ttl			1	I/S PIPE/TUBE <12" 52	144	050
PACKING SLIP				1	TOTAL	144	

FREIGHT CHARGES ARE TO BE PRE-PAID UNLESS THIS BLOCK IS CHECKED. ☐

Subject to Section 7 of conditions, if this shipment is to be delivered to the consignee without recourse on the consignor, the consignor shall sign the following statement. The carrier shall not make delivery of this shipment without payment of freight and all other lawful charges.
(Signature of Consignor)

CARRIER SEND FREIGHT BILL TO:

SHIPPER PER X

C.O.D. AMOUNT

C.O.D. FEE TO BE PAID BY
SHIPPER ☐ CONSIGNEE ☐

CARRIER
AGENT
PER:

Customer: AERO DESIGN LIMITED Ord #: T150331 Part #: MOT-197-C Cust PO#: 11035

PLYMOUTH TUBE CO USA®

1209 East 12th Street, Streator, Illinois 61364
Phone: (815) 673-1515 Fax: (815) 672-7343

PRODUCT CERTIFICATION

SALES ORDER - LINE ITEM/RLS
072724 - 1 / 0

WORK ORDER 017038
HEAT NUMBER 550726
MELT SOURCE Benteler Steel & Tube-Germany

SOLD TO

Earle M. Jorgensen Co.
1900 Mitchell Blvd
Schaumburg, IL 60193
USA

SEP 17 2010

ISO 9001:2000
AND
TS 16949:2002
CERTIFIED

CUSTOMER P.O.	CUSTOMER PART	QUANTITY	LADING NO	SHIPMENT DATE
P315890 003	105076			

PART DESCRIPTION SHSQ0500035J000
***** Square OD *****
Side1: 0.5000 Max:0.5100 Min:0.4900
Side2: 0.5000 Max:0.5100 Min:0.4900
Wall: 0.0350 Max:0.0380 Min:0.0320
Length: 17.00/24.00
Spec: Mil-T 6736B Seamless Aircraft
Grade: 4130
Anneal: Cond N

R 2++637

CERTIFICATION REQUIREMENTS
FAR BAA (FAR 52.225-1 Buy America Act Supplies). DFARS 252.225-7001 By America Act & Bal. of Payments Program FAR TAA (FAR 52.225-5 Trade Agreements)(Paragraph 1,3,4,5)This material was Eddy Current tested and conforms to the requirements of ASTM A-450.
The Grain size is determined and reported by the raw material supplier in accordance to ASTM E-112.
This raw material was magnetic particle inspected by the raw material supplier in accordance to AMS 2640J and/or ASTM E-1444, and rated as Frequency, and Severity to AMS 2301, latest revision.
Yield is determined by using the 0.2% offset method.

Chemical Analysis

C	Mn	P	S	Si	Al	Cr	Mo	Ni	Pb	Cu	V	Ti	Sn
.310	.53	.009	.002	.270	.035	.91	.18	.09	.001	.15	.003	.002	.012

Physical Properties

Freq.	Severity	Grain Size
.078	.058	9

Mechanical Properties

TEST	UNITS	#TESTS	HIGH	LOW	AVERAGE	STD-DEV
Tensile	Psi	3	124040	123200	123657	425
Yield	Psi	3	111380	110090	110660	658
Elongation	%	3	20	19	19	1
Rockwell B	Rb	3	99	99	99	0
Rockwell C	Rc					

TEST	RESULT
Decarb/OD	Pass
Total ID/OD decarb	Pass

Additional Specification(s)

AMS-T 6736B, 6360L & 6371J

I certify that the results are a true and correct copy of the records prepared and maintained by Plymouth Tube Company, Streator in compliance with the requirements of the cited specification. Chemistry is as reported by the Steel supplier. This test report cannot be reproduced or distributed except in full without the written permission of Plymouth Tube.

Mike Danko
Quality Assurance

Date Printed 09/10/2010

Customer: AERO DESIGN LIMITED Or[redacted]: T150331 Part #: MOT-197-C Cust PO#: [redacted]035

PLYMOUTH TUBE CO USA®

1209 East 12th Street, Streator, Illinois 61364
Phone: (815) 673-1515 Fax: (815) 672-7343

PRODUCT CERTIFICATION

SALES ORDER - LINE ITEM/RLS
072724 - 1 / 0

WORK ORDER 017038
HEAT NUMBER 550726
MELT SOURCE Benteler Steel & Tube-Germany

SOLD TO

Earle M. Jorgensen Co.
1900 Mitchell Blvd
Schaumburg, IL 60193
USA

ISO 9001:2000
AND
TS 16949:2002
CERTIFIED

CUSTOMER P.O.	CUSTOMER PART	QUANTITY	LADING NO	SHIPMENT DATE
P315890 003	105076			

This test report data is for the heat Chemistry Stated above.

The material in this test report is:

1) Drawn in the USA
2) Free from Polybrominated Biphenyls (PBB), Polybrominated Diphenyl Ethers (PBDE), and Mercury contamination.
3) NAFTA compliant.

End of Certification

I certify that the results are a true and correct copy of the records prepared and maintained by Plymouth Tube Company, Streator in compliance with the requirements of the cited specification. Chemistry is as reported by the Steel supplier. This test report cannot be reproduced or distributed except in full without the written permission of Plymouth Tube.

Mike Danko
Quality Assurance

Date Printed 09/10/2010

FROM: EARLE M. JORGENSEN (CANADA)INC
6925 8TH STREET NW

EDMONTON

S.I.D. ORDER NO. T150330
ORDERED BY: JEFF CLARKE
PHONE: 403 250-8027
CUST. ORD. NO.: 11035

SOLD TO
AERO DESIGN LIMITED
2013- 39TH AVENUE NORTH EAST
CALGARY
AB T2E 6R7

SHIP TO
AERO DESIGN LIMITED
2013- 39TH AVENUE NORTH EAST
CALGARY
AB T2E 6R7
FAX: 403 2508333
000

PAGE 1 OF 1
M322KPL1
A546500

XFER # 00423
T974711

DATE ORD.	CUSTOMER P.O.	F.O.B.	DEL AREA	VIA	CUST. ACCT.	PROM. DATE
15-MAR-11	11035	DESTIN	CALGARY	OUR TRUCK	230337	25-MAR-11

ORDER WGT.	I/S	TERR.	TYPE	TAX RATE	PPD/COLL	C.O.D.	TEST REPORT	SHIP DATE
204	003 PAUL LOPES		CT		PREPAID	2	0 PRO #	00- -00

*** To be INDIRECT SHIPPED from Branch 00423

105081 4130 CDS TUBING AMS T 6736 COND N;
600.00 FT .750 X .750 X .035 W X 17/24' R/L 600.0000 FT
W/FT 0.3403 EXT WGT: 204
PT#105081 JOB/BTCH# 11035

Best Effort
ll sales subject to US Export Administration Regulations.
lease refer to http://www.emjmetals.com/about/Terms.htm
HEAT # 105111 LOCATION:TRANSFER Y
1 BND 25 PC
600 FT

The property described below in apparent good order except noted (contents and condition of contents unknown) marked, consigned and destined as indicated below, which said carrier, (the word carrier being understood throughout this contract as meaning any person or corporation in possession of the property under the contract) agrees to carry to its usual place of delivery at said destination if on its route, otherwise to deliver to another carrier on the route to said destination it is mutually agreed as to each carrier of all or any of said property over all or any portion of said route to destination and as to each party at any time interested in all or any of said property that every service to be performed hereunder shall be subject to all terms and conditions of the Uniform Domestic Straight Bill of Lading set forth (1) in Official, Southern, Western, and Illinois freight Classification in effect on the date hereof, if this is a rail or rail water shipment, or (2) in the applicable motor carrier classification or tariff if this is a motor carrier shipment.
Shipper hereby certifies that he familiar with all the terms a conditions of the said bill of lading, including those on the back thereof, set forth in the classification or tariff which governs the transportation of this shipment and the said terms and conditions are hereby agreed to by the shipper and accepted for himself and his assigns.

ECEIVED ABOVE GOODS
N TERMS AND CONDITIONS
PPEARING ON BACK OF INVOICE X

INVOICE AMT.	ADDITIONAL CHARGES	V.A.T. TAX	TAX/AMT.	TOTAL

NO. OF PKGS.	PKG. TYPE	NO. OF PKGS	PKG. TYPE	TOTAL PCS.	DESCRIPTION OF ARTICLES	SHIP WGT.	CLS
1	Ttl			1	I/S PIPE/TUBE <12" 52	204	050
PACKING SLIP				1	TOTAL	204	

FREIGHT CHARGES ARE TO BE PRE-PAID UNLESS THIS BLOCK IS CHECKED. ☐

Subject to Section 7 of conditions, if this shipment is to be delivered to the consignee without recourse on the consignor, the consignor shall sign the following statement.
The carrier shall not make delivery of this shipment without payment of freight and all other lawful charges.
(Signature of Consignor)

CARRIER SEND FREIGHT BILL TO:

SHIPPER PER X

C.O.D. AMOUNT

C.O.D. FEE TO BE PAID BY
SHIPPER ☐ CONSIGNEE ☐

CARRIER
AGENT
PER:

Customer: AERO DESIGN LIMITED Order #: T150330 Part #: Cust PO#: 11035

PLYMOUTH TUBE CO USA®

1209 East 12th Street, Streator, Illinois 61364
Phone: (815) 673-1515 Fax: (815) 672-7348

PRODUCT CERTIFICATION

SALES ORDER - LINE ITEM/RLS
078171 - 1 / 0

WORK ORDER 017451
HEAT NUMBER 105111
MELT SOURCE Tubos Reunidos - Spain

SOLD TO

Earle M. Jorgensen Co.
1900 Mitchell Blvd
Schaumburg, IL 60193
USA

K344864

ISO 9001:2000 AND TS 16949:2002 CERTIFIED

CUSTOMER P.O.	CUSTOMER PART	QUANTITY	LADING NO	SHIPMENT DATE
P344432 001	105081			

PART DESCRIPTION SHSQ0750035JEMJ
***** Square OD *****
Side1: 0.7500 Max:0.7600 Min:0.7400
Side2: 0.7500 Max:0.7600 Min:0.7400
Wall: 0.0350 Max:0.0380 Min:0.0320
Length: 19.00/24.00
Spec: Mil-T 6736B Seamless Aircraft
Grade: 4130
Anneal: Cond N

CERTIFICATION REQUIREMENTS
FAR BAA (FAR 52.225-1 Buy America Act Supplies). DFARS 252.225-7001 By America Act & Bal. of Payments Program FAR TAA (FAR 52.225-5 Trade Agreements)(Paragraph 1,3,4,5)This material was Eddy Current tested and conforms to the requirements of ASTM A-450.
The Grain size is determined and reported by the raw material supplier in accordance to ASTM E-112.
This raw material was magnetic particle inspected in accordance to AMS 2640J and/or ASTM E-1444, and rated as Frequency, and Severity to AMS 2301, latest revision.
Yield is determined by using the 0.2% offset method.

Chemical Analysis

C	Mn	P	S	Si	Al	Cr	Mo	Ni	Pb	Cu	V	Ti	Sn
.30	.47	.007	.001	.22	.020	.820	.160	.060	.004	.150	.012	.001	.008

Physical Properties

Freq.	Severity	Grain Size
.000	.000	8

Mechanical Properties

TEST	UNITS	#TESTS	HIGH	LOW	AVERAGE	STD-DEV
Tensile	Psi	3	113650	112490	113167	604
Yield	Psi	3	109970	108390	109207	791
Elongation	%	3	19	15	17	2
Rockwell B	Rb	3	98	98	98	0
Rockwell C	Rc					

TEST	RESULT
Decarb/OD	Pass
Total ID/OD decarb	Pass

Additional Specification(s)

AMS-T 6736B, 6360L & 6371J

I certify that the results are a true and correct copy of the records prepared and maintained by Plymouth Tube Company, Streator in compliance with the requirements of the cited specification. Chemistry is as reported by the Steel supplier. This test report cannot be reproduced or distributed except in full without the written permission of Plymouth Tube.

Mike Danko
Quality Assurance

Date Printed 01/21/2011

Customer: AERO DESIGN LIMITED O#: T150330 Part #: Cust PO#: 11035

PLYMOUTH TUBE CO USA®

1209 East 12th Street, Streator, Illinois 61364
Phone: (815) 673-1515 Fax: (815) 672-7343

PRODUCT CERTIFICATION

SALES ORDER - LINE ITEM/RLS
078171 - 1 / 0

WORK ORDER 017451
HEAT NUMBER 105111
MELT SOURCE Tubos Reunidos - Spain

SOLD TO

Earle M. Jorgensen Co.
1900 Mitchell Blvd
Schaumburg, IL 60193
USA

ISO 9001:2000
AND
TS 16949:2002
CERTIFIED

CUSTOMER P.O.	CUSTOMER PART	QUANTITY	LADING NO	SHIPMENT DATE
P344432 001	105081			

This test report data is for the heat Chemistry Stated above.

The material in this test report is:

1) Drawn in the USA
2) Free from Polybrominated Biphenyls (PBB), Polybrominated Diphenyl Ethers (PBDE), and Mercury contamination.
3) NAFTA compliant.

End of Certification

I certify that the results are a true and correct copy of the records prepared and maintained by Plymouth Tube Company, Streator in compliance with the requirements of the cited specification. Chemistry is as reported by the Steel supplier. This test report cannot be reproduced or distributed except in full without the written permission of Plymouth Tube.

Mike Danko
Quality Assurance

Date Printed 01/21/2011

***AERO* DESIGN LTD.**
2013 – 39th Ave N. E., Calgary, Alberta, T2E 6R7 www.aerodesign.ca

F A X C O V E R S H E E T

FAXED

DATE:	March 15, 2011	**TIME:**	1:45 PM
TO:	**Paul Lopes**	**PHONE:**	780-801-4015
	EMJ Metals	**FAX:**	780-463-1215
FROM:	Jeff Clarke Aero Design Ltd.	**PHONE:** **FAX:**	403-250-8027 403-250-8333

Number of pages including cover sheet: 1

RE: QUOTE PLEASE

Paul,

Please provide a quote for the following:

4130 Steel, Cond. N, MIL-T-6736

½ x ½ x 0.035" square tubing	500 feet, 1000 feet, 2000 feet
¾ x ¾ x 0.035" square tubing	500 feet, 1000 feet, 2000 feet

Thank you,

Jeff Clarke

Jeff Clarke

Jeff Clarke

From: PLopes@emjmetals.com
Sent: March 15, 2011 3:36 PM
To: JEFF@AERODESIGN.CA
Subject: EMJ - EDMONTON Express Sales Confirmation # 175696

Quote175696_1535
32.htm (10 KB)...

ORDER CONFIRMATION.

EMJ - EDMONTON
ORDER CONFIRMATION
DATE: 3/15/2011

6925 8TH STREET NW

EDMONTON AB T6P 1T9

CUSTOMER NUMBER: 230337
QUOTE NUMBER: 175696
CUSTOMER PO#: 11035
FOB: Delivered

CUSTOMER: AERO DESIGN LIMITED
2013- 39TH AVENUE NORTH EAST
CALGARY AB T2E 6R7

SHIP TO: AERO DESIGN LIMITED

2013- 39TH AVENUE NORTH EAST
CALGARY AB T2E 6R7

ATTENTION: JEFF CLARKE
PHONE NO : 403-2508027

==========

ITEM#: 105076
CUST. PART NO:
PO NO:
DATE/TYPE: 3/25/2011
DESCRIPTION: 27 Tubes-540 FT
4130 CDS TUBING AMS T 6736 COND N;
.500 X .500 X .035 W X 17/24' R/L
ORD. QTY.: 540
UOM: FT
UNIT PRICE: C$5.1500
EXT. PRICE: C$2,781.00
SHIP VIA: OUR TRUCK

Best Effort
Ship Weight: 120 LB

ITEM#: 105081
CUST. PART NO:
PO NO:
DATE/TYPE: 3/25/2011
DESCRIPTION: 25 Tubes-500 FT

4130 CDS TUBING AMS T 6736 COND N;
.750 X .750 X .035 W X 17/24' R/L
ORD. QTY.: 500
UOM: FT
UNIT PRICE: C$6.0000
EXT. PRICE: C$3,000.00
SHIP VIA: OUR TRUCK

Best Effort
Ship Weight: 170 LB

Total Ship Weight For The Order: 290 LB
TOTAL: C$5,781.00
Sales Tax: C$289.06
Grand Total: C$6,070.06
==========

For further information about your order, please contact your materials specialist: PAUL LOPES
EMAIL: PLOPES@EMJMETALS.COM PHONE: (780)801-4015 FAX: (780)463-1215
CONDITIONS: All items are subject to prior sale. All items are subject to price in effect at time of shipment unless we have specifically noted otherwise. Delivery date based upon lead time of quotation and is subject to change at time of order. All weights are theoretical and may be subject to adjustment. Any process not specifically quoted in the above price will be an additional charge. These commodities are controlled for export by the United States governmentunder the Export Administration Regulations. Diversion contrary to U.S. law prohibited. Purchaser is responsible to comply with these regulations if the items are to be exported from the United States or re-exported from a foreign country. Please refer to our website for full terms & conditions at: http://www.emjmetals.com/about/Terms.htm.

TERMS OF PAYMENT: Invoices are issued as of the date of delivery covering deliveries from our stocks and as of the date of the shipment covering direct mill shipments. The acceptance of any order or specification and terms of payment on all sales and orders is subject to approval of the Sellers Credit Department, and Seller may at any time decline to make any shipment or delivery or perform any work except upon receipt of payment or security or upon terms and conditions satisfactory to Sellers Credit Department

ROSENAU TRANSPORT LTD.
www.rosenau.org

OFFICES IN:

BRANDON	(204) 729-8554	LETHBRIDGE	(403) 327-7444
BROOKS	(403) 362-0440	LLOYDMINSTER	(780) 808-5219
CALGARY	(403) 279-4800	MEDICINE HAT	(403) 548-6704
EDMONTON	(780) 431-2065	RED DEER	(403) 341-2340
FORT NELSON	(250) 774-2045	REGINA	(306) 721-7033
FORT ST JOHN	(250) 263-9484	SASKATOON	(306) 244-7088
GRANDE PRAIRIE	(780) 814-7447	SWIFT CURRENT	(306) 773-5875

NOTE CAREFULLY CONDITIONS ON BACK WHICH ARE HEREBY ACCEPTED.
DAMAGE OR SHORTAGES MUST BE NOTED AT TIME OF DELIVERY.

QUOTE THIS PROBILL NUMBER WHEN REFERRING TO THIS SHIPMENT: 110888429

DATE		REFERENCE NO.	TRAILER	INITIAL	PAGE	MASTER PRO
03/23/11		7545	PD 123	KC11	1	

CONSIGNEE:	SHIPPER:	BILLED TO:
CGY AERO DESIGN 2013 39 AVENUE NE CALGARY, AB T2E 6R7	EDM EARLE M. JORGENSEN (CANAD 6925 8 STREET DOCK DROP EDMONTON, AB T6P 1T9	75813 EARLE M. JORGENSEN (CANAD RELIANCE METALS CANADA LI 6925 8 STREET EDMONTON, AB T6P 1T9

PCS.	DESCRIPTION	WEIGHT	RATE	PREPAID	CHARGE COLLECT	CASH COLLECT
3	2-BUNDLES STEEL TUBES 1-ENVELOPE FUEL SURCHARGE AT % VALUATION CHARGES GST L _____ x W _____ x H _____	348 Inches				

ADVANCE				
BEYOND		DECLARED VALUE	6,938	C.O.D. / FEE
		TOTALS	PREPAID	

REC'D BY: [illegible]

DEL. BY: [illegible] Mar.24/11 (3)

DATE/TIME

CUSTOMER COPY

20255075 RR Donnelley ©2007. All rights reserved. - 9355

NOTICE OF CLAIM

(a) No carrier is liable for loss, damage or delay to any goods under the Bill of Lading unless notice thereof setting out particulars of the origin, destination and date of shipment of the goods and the estimated amount claimed in respect of such loss, damage or delay is given in writing to the originating carrier or the delivering carrier within sixty (60) days after the delivery of the goods, or in the case of failure to make delivery, within nine (9) months from the date of shipment.

(b) The final statement of the claim must be filed within nine (9) months from the date of shipment together with a copy of the paid freight bill.

Received at the point of origin on the date specified, from the consignor mentioned herein, the property herein described, in apparent good order, except as noted (contents and conditions of contents of package unknown) marked, consigned and destined as indicated on face, which the carrier agrees to carry and to deliver to the consignee at the said destination, if on its own authorized route or otherwise to cause to be carried by another carrier on the route to said destination, subject to the rates and classification in effect on the date of shipment.

It is mutually agreed, as to each carrier of all or any of the goods over all or any portion of the route to destination, and as to each party at any time interested in all or any of the goods, that every service to be performed here under shall be subject to all conditions not prohibited by law, whether printed or written, which are hereby agreed by the consignor and accepted for himself and his assigns.

The contract for the carriage of the goods listed in the bill of lading is, by regulation passed by the Alberta Motor Transport Board under the Motor Transport Act, deemed to contain and be subject to conditions set out in the regulation.

MAXIMUM LIABILITY ($4.41/KG) $2.00 PER POUND COMPUTED
ON TOTAL WEIGHT OF THE SHIPMENT UNLESS DECLARED
VALUATION STATES OTHERWISE.

GST NO. 104628656

STRAIGHT BILL OF LADING — SHORT FORM — Not Negotiable

7545

CARRIER: Rosenau

DATE: 3/23/11

Prepaid

CUST. ORDER NO.(S):

Earle M. Jorgenson (Canada) Inc.

6925 - 8 Street, Edmonton, Alberta T6P 1T9
Phone (780) 432-5505 Fax (780) 432-5984

CONSIGNED TO: New Design
2013-39 Ave NE
Calgary, AB T2E 6R7

LOADED BY SHIPPER — UNLOADED BY CONSIGNEE

PACKAGES Specify: Bags Boxes or Drums	Bundles	Pallets	Tubes	Loose or Coil	DESCRIPTION OF ARTICLES	NUMBER OF PIECES	WEIGHT	NMFC - CLASS	
2 BNDS of Steel tubes (TISU330/331)							348		
1 Envelope mounted.					(3) BELL POLLARD		03-23-11		
					110888429				
					DOCK.				
Declared Value CND $ 6937.20					TOTAL:	3	348		

PACKING ENVELOPE MUST ACCOMPANY SHIPMENT TO DESTINATION

This shipment is subject to weather damage and must by protected, and/or tarped. *Desired Delivery Date:*

REMIT C.O.D. TO SHIPPER: AT

Street _____

City _____ St ____ Zip _____

CONSIGNEE'S CHECK ☐ ACCEPTABLE WHEN THIS BOX IS CHECKED

COD AMT: **$**

C.O.D. FEE TO BE PAID BY: ☐ SHIPPER ☐ CONSIGNEE

TOTAL CHARGES $

CARRIER SEND FREIGHT BILL TO:

Subject to Section 7 of conditions, If this shipment is to be delivered to the consignee without recourse on the consignor, the consignor shall sign the following statement: The carrier shall not make delivery of this shipment without payment of freight and all other lawful charges.

(3)

BELL POLLARD

SIGNATURE OF CONSIGNOR

FREIGHT CHARGES ARE PREPAID UNLESS MARKED COLLECT

CHECK BOX IF COLLECT ☐

RECEIVED, subject to the classifications and tarriffs in effect on the date of the issue of this Bill of Lading, the property described above in apparent good order, except as noted (contents and condition of contents of packages unknown), marked, consigned, and destined as indicated above which said carrier (the word carrier being understood throughout this contract as meaning any person or corporation in possession of the property under the contract) agrees to carry to its usual place of delivery at said destination, if on its route, otherwise to deliver to another carrier on the route to said destination. It is mutually agreed as to each carrier of all or any of said property, aver all or any portion of said route to destination and as to each party at any time interested in all or any said property, that every service to be performed hereunder shall be subject to all the bill lading terms and conditions in the governing classification on the date of shipment.

Shipper hereby certifies that he is familiar with all the bill of lading terms and conditions in the governing classification the said terms and conditions are hereby agreed to by the shipper and accepted for himself and his assigns.

This is to certify that the above named materials are properly classified, described, packaged, marked and labeled and are in proper condition for transportation, according to the applicable regulations of the Department of Transportation

PERMANENT POST OFFICE ADDRESS OF SHIPPER: EARLE M. JORGENSON (CANADA) INC., 1255 AVENUE LA PLACE, LAVAL, PQ H7C 2N6

SHIPPER PER

CARRIER PER

DATE 3/23/11

AERO Design Ltd.
2013 - 39th Avenue N.E.
Calgary, Alberta, T2E 6R7
Phone: (403) 250-8027
Fax: (403) 250-8333

Purchase Order

P.O. Number	**11033**
Date	09-Mar-11

Vendor:	
Name:	Metal Supermarkets (Calgary)
Address:	Bay 3, 3716 - 56th Ave. S.E. Calgary, AB, T2C 2B5
Phone:	403-720-2267
Fax:	403-720-2268
Attention:	0
Currency:	CAD

Ship To:	
Name:	AERO Design Ltd.
Address:	2013 - 39th Avenue N.E. Calgary, Alberta, T2E 6R7
Phone:	(403) 250-8027
Fax:	(403) 250-8333
Attention:	

ITEM	DESCRIPTION	QTY	RATE	AMOUNT
1	304 Stainless Steel, 0.625 Round	144	0.63	90.40
		Subtotal		90.40
	Sales Tax	GST	5.00%	4.52
		Total	**CAD**	**$94.92**

Metal Supermarkets CALGARY
Bay 3, 3716 56 Ave SE
CALGARY, AB
T2C 2B5

The Convenience Stores For Metal™

Phone: (403) 720-2267
Fax: (403) 720-2268
GST #: 119898427

INVOICE # 510-116702

IC

Date 09-Mar-11

Bill to: 39

AERO DESIGN LTD.
2013-39 AVE NE
CALGARY, AB
T2E 6R7

TED BURGOIN

(403) 250-8027 (403) 250-8333

Shipment to:

TED BURGOIN

Prepared by: JAKOB

Order #	P.O. #	Shipment	F.O.B.	Terms
77525	11033	Pick-up	Our Plant	Net 30

Qty	Product	Unit of Measure	Unit Price	Comment	Total
2	SR304/58 SS ROUND 304 .625	72.00 INCH	0.6278		$90.40

Add'l Cost

Sub TOTAL	$90.40
Add'l Costs	$0.00
GST	$4.52
PST	$0.00
TOTAL	**$94.92**

Thank-you for your business !!

INVOICE COPY

Signature_____

AERO Design Ltd.
2013 - 39th Avenue N.E.
Calgary, Alberta, T2E 6R7
Phone: (403) 250-8027
Fax: (403) 250-8333

Purchase Order

P.O. Number	**11032**
Date	09-Mar-11

Vendor:	
Name:	Accurate Screen and Grating
Address:	#147 - 10905 - 48th Street SE Calgary, AB, T2C 1G8
Phone:	403-723-0323
Fax:	403-236-0703
Attention:	Ed D
Currency:	CAD

Ship To:	
Name:	AERO Design Ltd.
Address:	2013 - 39th Avenue N.E. Calgary, Alberta, T2E 6R7
Phone:	(403) 250-8027
Fax:	(403) 250-8333
Attention:	Jeff Clarke

ITEM	DESCRIPTION	QTY	RATE	AMOUNT
1	Expand Mesh - 304 Stainless - 3/4-16F, 4x8 sht	30	95.20	2,856.00
	Note: 5 in stock, remainder back order			
		Subtotal		2,856.00
	Sales Tax	GST	5.00%	142.80
		Total	**CAD**	**$2,998.80**

ACCURATE
SCREEN + GRATING
Products with holes, backed with solid service

#147 - 10905 - 48 St SE
Calgary AB Canada T2C 1G8
Phone: (403) 723-0323
Fax: (403) 236-0703
Toll Free: 1-877-857-0323

PACKING SLIP

PO No:	11032
Order No:	0000614015
Date:	09-Mar-2011

BILL TO:

Aero Design Calgary
2013 39th Ave. NE
Calgary AB T2E6R7
Phone: (403) 250-8027 Ext.
Fax: (403) 250-8333 Ext.

SHIP TO:

Aero Design Calgary
2013 39th Ave. NE
Calgary AB T2E6R7

Customer No:	AERODE/CALGARY
Salesperson:	Ed D
Ship Via:	..Customer P/U
Tracking No:	
Terms:	

PART NO.	DESCRIPTION	UOM	LBS	LOC	QTY ORD	QTY SHIPPED
	Expanded Flat 304ss .75-16F 4'x8'	SHEET	17	CA-4	5.00	5
	Thanks Jeff.					
	Ed					
	RECEIVED By:_____ Total LBS :		85			

1) Thank you for this order, please check for mis-counts and advise us without delay if there are any issues to be resolved

2) Re: FREIGHT DAMAGE - ALL freight claims on PPD freight need to be resolved between the receiving customer and the freight carrier

GST Number 86618-5010 RT0001

AERO Design Ltd.
2013 - 39th Avenue N.E.
Calgary, Alberta, T2E 6R7
Phone: (403) 250-8027
Fax: (403) 250-8333

Purchase Order

P.O. Number	**11031**
Date	03-Mar-11

Vendor:	
Name:	API
Address:	Suite 5 575 Palmer Road N.E. Calgary, Alberta T2E 7G4
Phone:	403-250-9383
Fax:	403-250-8186
Attention:	0
Currency:	CAD

Ship To:	
Name:	AERO Design Ltd.
Address:	2013 - 39th Avenue N.E. Calgary, Alberta, T2E 6R7
Phone:	(403) 250-8027
Fax:	(403) 250-8333
Attention:	

ITEM	DESCRIPTION	QTY	RATE	AMOUNT
1	AN3-4A Bolt (25 Pack)	3	4.03	12.09
2	MS21042L3 (50 pack)	6	22.47	134.82
		Subtotal		146.91
	Sales Tax	GST	5.00%	7.35
		Total	**CAD**	**$154.26**

API WANT LIST

Company AERO DESIGN LTD

Contact Name RICHARD

Address 2013-39th AVE NE.
CALGARY, AB T2E 6R7.

Phone 403-250-8027.

Order Date MARCH 3, 2011

Date Needed SOON.

P.O. # 11031

Work Order #

Ship Via

ORDER UNTIL MIDNIGHT EST FOR SAME DAY SHIPPING • FAX ORDERS TO 800-950-1411

QUANTITY	PART NUMBER	DESCRIPTION
300	MS21042N3	NUT, LOCKING (Mini #10)

Additional instructions

API
AEROSPACE PRODUCTS INTERNATIONAL

API Asia Pacific
Philippines
63.45.599.5490 Tel
63.45.599.5464 Fax
PhilSales@apiworldwide.com

API China
Shanghai (Pudong)
86.21.5866.8660 Tel
86.21.5866.8366 Fax
ChinaSales@apiworldwide.com

API Canada
Calgary
888.322.8281 Tel
888.322.8285 Fax
CalgarySales@apiworldwide.com

Montreal
800.214.7404 Tel
800.214.8875 Fax
MontrealSales@apiworldwide.com

API USA
Memphis
888.API.24X7 Tel
800.950.1411 Fax
24X7@apiworldwide.com

API
AEROSPACE PRODUCTS INTERNATIONAL

API
#550 - 575 Palmer Road N.E.
CALGARY AB T2E 7G4
CANADA

03/04/2011 13:33:40

Pack List

Shipping Address
AERO DESIGN LTD
2013 39 AVE NE
CALGARY AB T2E 6R7
CANADA

Forwarding Agent's Address

Shipping Instructions
Detailed Shipping Instructions at the end of the document

Packing Instructions
Detailed Packing Instructions at the end of the document

Information

Document Number	80852073
Document Date	03/04/2011
Purchase Order No.	11031
Purchase Order Date	03/03/2011
Sales Order Number	757981
Sales Order Date	03/03/2011
Customer Number	5101060
Shipping Conditions	Will Call
Incoterms	
Cust Ship Acct	
Delivery Date	03/04/2011
Bill of Lading	
Total Weight	1.080 LB
Total Volume	286.800 IN3
Carrier	PICK UP BY CUSTOMER

Item	Material	Material Description	Quantity	Weight	Batch Num
10	AN3-4A	BOLT (PKG 25)			
	Batches				
	0001713605 (PO:4500135873)		3 PAC	0.570 LB	
20	MS21042L3	SELF-LOCK NUT (PKG 50)			
	Batches				
	0001723872 (PO:4500139577)		6 PAC	0.510 LB	

Shipping and Packing Instructions

CERTIFICATE OF CONFORMANCE

I hereby certify that th eaircraft parts described hereon were acquired from a source of supply that is consistent with the conditions under which Transport Canada distributor approval number 77-98 has been granted.

Authorized Signature Rw

AO # 77-98
API # 11

Return Policies

Warranty Information

The manufacturer warrants most products sold by API. In addition, API will gladly process warranty claims for products originally purchased through API. API offers no additional warranty beyond that of the manufacturer. Many manufacturers include warranty information in their packaging. Please feel free to contact an API Quality Service Representative concerning warranty information or to obtain the RMA (Return Materials Authorization) needed to file a warranty claim. To speak with an API Quality Service Representative dial 888-API-24X7 (888-274-2497). RMAs are valid for 30 days from date issued.

A warranty claim form and an RMA must accompany all products returned for warranty. Without this documentation API will not be able to assist you in filing your claim. Manufacturer warranty claim forms are available at WWW.APIWORLDWIDE.COM.

Please be advised that some manufacturers honor warranties by remanufacturing the part rather than issuing credit. API will return the remanufactured part to the customer.

Returns Made Easy

API accepts most returns that were purchased from our stock within 30 days of invoke. Just call an API Quality Service Representative at 888-API-24X7 (888-274-2497) to obtain the necessary RMA (Return Materials Authorization) number. By simply including the API RMA with your return, the time needed to issue credit is minimized. Nobody enjoys having to return parts. API understands this and makes it as trouble-free as possible. Remember, all returned items must be in their original packaging, must be in new, uninstalled condition and include all original documentation. A restocking fee of 15%, with a minimum of $25.00, will be assessed on all stocked items except those due to an error on API's part. RMAs are valid for 30 days from the date of issue.

No returns will be accepted 30 days from the date of invoice. Please remember that Electrical Components, Shelf-Life Limited, Non-Stock items, Drop-ship Items and Special Orders are non-returnable. Once the RMA expires the return can no longer be accepted by API and will be returned at the customer's expense.

Quick Core Credit

When ordering exchange items, the API system will automatically assign the necessary RMA (Return Materials Authorization) number to return your core. The API CSR will supply you with any additional details needed to return your core. All cores are subject to final inspection and acceptance from the vendor or manufacturer. Unless prior written authorization is obtained from API, all cores must be "like part numbers" and must be in serviceable condition. Otherwise, API will pass on any fees assessed by our manufacturer for substandard or unlike cores.

The API RMA system will print a Core Letter, which includes the customer's name and the API delivery number in which the exchange was purchased. The Core Letter must accompany all core returns. This RMA is valid for 60 days from date of invoice. Please ask your API Quality Service Representative for the return due date of your particular core. Once the RMA expires the core can no longer be accepted by API and will be returned at the customer's expense. *In the event your Return Core Letter is misplaced, contact the API Quality Service Representative to obtain a replacement.*

We appreciate your business and reaffirm our commitment to provide the most responsive customer service, as well as the highest quality compliant products, at competitive prices.

API
AEROSPACE PRODUCTS
INTERNATIONAL

API
#550 - 575 Palmer Road N.E.
CALGARY AB T2E 7G4
CANADA
Phone: 403-250-9383
Fax: 403-250-8186
GST # 143526788RT

PRICING LIST

NUMBER	DATE
80852073	03/04/2011

PLEASE REMIT TO:
PO Box
Calgary AB T2P 2H6
REFER TO INVOICE NUMBER WHEN REMITTING

5101060

BILL TO AERO DESIGN LTD
2013 39 AVE NE
CALGARY AB T2E 6R7
CANADA

5101060

SHIP TO AERO DESIGN LTD
2013 39 AVE NE
CALGARY AB T2E 6R7
CANADA

Phone No: 403-250-8027

CUSTOMER PURCHASE ORDER NO.	ORDER NO. / DELIVERY NO.
11031	757981 - 80852073

SHIPPED VIA	DELIVERING PLANT	CARTONS
	API - Calgary	1

QUANTITY ORDERED	QUANTITY SHIPPED	DESCRIPTION MATERIAL		U/M	LIST PRICE	UNIT PRICE	EXTENDED PRICE
3		BOLT (PKG 25)	AN3-4A	PA	8.95	4.03	12.09
6		SELF-LOCK NUT (PKG 50)	MS21042L3	PA	49.93	22.47	134.82
		Item Total					146.91
		Canadian GST					7.34

TOTAL CAD 154.25

Return Policies

Warranty Information

The manufacturer warrants most products sold by API. In addition, API will gladly process warranty claims for products originally purchased through API. API offers no additional warranty beyond that of the manufacturer. Many manufacturers include warranty information in their packaging. Please feel free to contact an API Quality Service Representative concerning warranty information or to obtain the RMA (Return Materials Authorization) needed to file a warranty claim. To speak with an API Quality Service Representative dial 888-API-24X7 (888-274-2497). RMAs are valid for 30 days from date issued.

A warranty claim form and an RMA must accompany all products returned for warranty. Without this documentation API will not be able to assist you in filing your claim. Manufacturer warranty claim forms are available at WWW.APIWORLDWIDE.COM.

Please be advised that some manufacturers honor warranties by remanufacturing the part rather than issuing credit. API will return the remanufactured part to the customer.

Returns Made Easy

API accepts most returns that were purchased from our stock within 30 days of invoke. Just call an API Quality Service Representative at 888-API-24X7 (888-274-2497) to obtain the necessary RMA (Return Materials Authorization) number. By simply including the API RMA with your return, the time needed to issue credit is minimized. Nobody enjoys having to return parts. API understands this and makes it as trouble-free as possible. Remember, all returned items must be in their original packaging, must be in new, uninstalled condition and include all original documentation. A restocking fee of 15%, with a minimum of $25.00, will be assessed on all stocked items except those due to an error on API's part. RMAs are valid for 30 days from the date of issue.

No returns will be accepted 30 days from the date of invoice. Please remember that Electrical Components, Shelf-Life Limited, Non-Stock items, Drop-ship Items and Special Orders are non-returnable. Once the RMA expires the return can no longer be accepted by API and will be returned at the customer's expense.

Quick Core Credit

When ordering exchange items, the API system will automatically assign the necessary RMA (Return Materials Authorization) number to return your core. The API CSR will supply you with any additional details needed to return your core. All cores are subject to final inspection and acceptance from the vendor or manufacturer. Unless prior written authorization is obtained from API, all cores must be "like part numbers" and must be in serviceable condition. Otherwise, API will pass on any fees assessed by our manufacturer for substandard or unlike cores.

The API RMA system will print a Core Letter, which includes the customer's name and the API delivery number in which the exchange was purchased. The Core Letter must accompany all core returns. This RMA is valid for 60 days from date of invoice. Please ask your API Quality Service Representative for the return due date of your particular core. Once the RMA expires the core can no longer be accepted by API and will be returned at the customer's expense. *In the event your Return Core Letter is misplaced, contact the API Quality Service Representative to obtain a replacement.*

We appreciate your business and reaffirm our commitment to provide the most responsive customer service, as well as the highest quality compliant products, at competitive prices.

AERO Design Ltd.
2013 - 39th Avenue N.E.
Calgary, Alberta, T2E 6R7
Phone: (403) 250-8027
Fax: (403) 250-8333

Purchase Order

P.O. Number	**11030**
Date	23-Feb-11

Vendor:	
Name:	Metal Supermarkets (Calgary)
Address:	Bay 3, 3716 - 56th Ave. S.E. Calgary, AB, T2C 2B5
Phone:	403-720-2267
Fax:	403-720-2268
Attention:	0
Currency:	CAD

Ship To:	
Name:	AERO Design Ltd.
Address:	2013 - 39th Avenue N.E. Calgary, Alberta, T2E 6R7
Phone:	(403) 250-8027
Fax:	(403) 250-8333
Attention:	Ted

ITEM	DESCRIPTION	QTY	RATE	AMOUNT
1	5/16" Dia Brass Rod	144	0.34	49.02
		Subtotal		49.02
	Sales Tax	GST	5.00%	2.45
		Total	**CAD**	**$51.47**

Metal Supermarkets CALGARY
Bay 3, 3716 56 Ave SE
CALGARY, AB
T2C 2B5

METAL supermarkets
The Convenience Stores For Metal™

Phone: (403) 720-2267
Fax: (403) 720-2268
GST #: 119898427

INVOICE # 510-116122

Date 23-Feb-11

IC

Bill to: 39

AERO DESIGN LTD.
2013-39 AVE NE
CALGARY, AB
T2E 6R7

TED BURGOIN

(403) 250-8027 (403) 250-8333

Shipment to:

TED BURGOIN

Prepared by: JAKOB

Order #	P.O. #	Shipment	F.O.B.	Terms
76795	Ted 11030	Pick-up	Our Plant	Net 30

Qty	Product	Unit of Measure	Unit Price	Comment	Total
1	BR360/516 BRASS ROUND 360 .313	144.00 INCH	0.3404		$49.02

Add'l Cost

Sub TOTAL	$49.02
Add'l Costs	$0.00
GST	$2.45
PST	$0.00
TOTAL	**$51.47**

Thank-you for your business !!

INVOICE COPY

Signature_____

AERO Design Ltd.
2013 - 39th Avenue N.E.
Calgary, Alberta, T2E 6R7
Phone: (403) 250-8027
Fax: (403) 250-8333

Purchase Order

P.O. Number	**11029**
Date	28-Feb-11

Vendor:	
Name:	Top Gun Coatings
Address:	#102, 4715 - 13 Street N.E. Calgary, AB T2E 6M3
Phone:	250-5393
Fax:	250-5392
Attention:	Hugh
Currency:	CAD

Ship To:	
Name:	AERO Design Ltd.
Address:	2013 - 39th Avenue N.E. Calgary, Alberta, T2E 6R7
Phone:	(403) 250-8027
Fax:	(403) 250-8333
Attention:	Ted

ITEM	DESCRIPTION	QTY	RATE	AMOUNT
1	Burn/blast lids	2	75.00	150.00
		Subtotal		150.00
	Sales Tax	GST	5.00%	7.50
		Total	**CAD**	**$157.50**

PACKING SLIP

TOP GUN COATINGS INC.

#101, 4715 - 13th STREET N.E., CALGARY, ALBERTA T2E 6M3
PH: (403) 250-5393 FAX: (403) 250-5392
www.topguncoatings.com

TO: AERO DESIGN 2013 - 39 AVENUE N.E. CALGARY, AB T2E 6R7 PH: (403) 250-8027 FAX: (403) 250-8333	DATE: FEBRUARY 28, 2011 INVOICE NO: 41737 PO NO: TED 11029 ATTN: JEFF CLARKE

SHIPPED VIA	TERMS
PICK UP	30 DAYS

QUANTITY	DESCRIPTION	UNIT PRICE	AMOUNT
	BURN OFF		
1 ORDER	2 - BASKET LIDS	$150.00	$150.00
	TOTAL: 2 PIECES		

SUB-TOTAL	$150.00
GST (5%)	$7.50
SHIPPING & HANDLING	
TOTAL DUE	$157.50

GST #122043409

Authorized Signature

THANK-YOU FOR YOUR ORDER

AERO Design Ltd.
2013 - 39th Avenue N.E.
Calgary, Alberta, T2E 6R7
Phone: (403) 250-8027
Fax: (403) 250-8333

Purchase Order

P.O. Number	**11028**
Date	02-Mar-11

Vendor:	
Name:	API
Address:	Suite 5 575 Palmer Road N.E. Calgary, Alberta T2E 7G4
Phone:	403-250-9383
Fax:	403-250-8186
Attention:	0
Currency:	CAD

Ship To:	
Name:	AERO Design Ltd.
Address:	2013 - 39th Avenue N.E. Calgary, Alberta, T2E 6R7
Phone:	(403) 250-8027
Fax:	(403) 250-8333
Attention:	Richard

ITEM	DESCRIPTION	QTY	RATE	AMOUNT
1	MS21044N3 Nut (50 pk)	10	9.22	92.20
2	NAS1149F0332P Washer (100 pk)	2	1.84	3.68
3	MS21044C3 Nut (50 pk)	2	15.79	31.58
4	NAS1149F0363P Washer (100 pk)	5	2.77	13.85
5	NAS1149F0463P Washer (100 pk)	5	3.19	15.95
		Subtotal		157.26
	Sales Tax	GST	5.00%	7.86
		Total	**CAD**	**$165.12**

API
AEROSPACE PRODUCTS INTERNATIONAL

API - Canada
2461 46th Ave.
LACHINE QC H8T 3C9
CANADA

Phone: 514-636-5720
Fax: 514-636-6092

INVOICE

NUMBER	DATE
92055297	03/02/2011

PLEASE REMIT TO:
PO Box 223 Station M
Calgary AB T2P 2H6

REFER TO INVOICE NUMBER WHEN REMITTING

BILL TO
CUSTOMER NO. 5101060
AERO DESIGN LTD
2013 39 AVE NE
CALGARY AB T2E 6R7
CANADA

SHIP TO
CUSTOMER NO. 5101060
AERO DESIGN LTD
2013 39 AVE NE
CALGARY AB T2E 6R7
CANADA

Phone No: 403-250-8027

CUSTOMER PURCHASE ORDER NO.	ORDER NO. / DELIVERY NO.	TERMS
11028	756890 - 80850882	Within 30 days Due net

SHIPPED VIA	DELIVERING PLANT	CARTONS	WEIGHT
Will Call	API - Calgary	1	4.735

QUANTITY ORDERED	QUANTITY SHIPPED	DESCRIPTION MATERIAL		U/M	LIST PRICE	UNIT PRICE	EXTENDED PRICE
10	10	MS21044N3	NUT, NYLON SELF LOCKING (PG 50	PA	20.50	9.22	92.20
2	2	NAS1149F0332P	WASHER (PKG 100)	PA	4.10	1.84	3.68
2	2	MS21044C3	NUT, NYLON SELF LOCKING (PG 50	PA	35.10	15.79	31.58
5	5	NAS1149F0363P	WASHER (PKG 100)	PA	6.15	2.77	13.85
5	5	NAS1149F0463P	WASHER (PKG 100)	PA	7.08	3.19	15.95
		Item Total					157.26
		Canadian GST					7.86

Tracking Numbers
PICK UP

GST # 143526788RT
QST # 1021898097

ORIGINAL INVOICE

TOTAL CAD 165.12

AERO Design Ltd.
2013 - 39th Avenue N.E.
Calgary, Alberta, T2E 6R7
Phone: (403) 250-8027
Fax: (403) 250-8333

Purchase Order

P.O. Number	**11027**
Date	10-Mar-11

Vendor:	
Name:	Lab Machine Works Inc.
Address:	4510 - 14th Street NE Calgary, AB, T2E 6T7
Phone:	403-717-9133
Fax:	403-717-9134
Attention:	Mike Desjardins
Currency:	CAD

Ship To:	
Name:	AERO Design Ltd.
Address:	2013 - 39th Avenue N.E. Calgary, Alberta, T2E 6R7
Phone:	(403) 250-8027
Fax:	(403) 250-8333
Attention:	Jeff Clarke

ITEM	DESCRIPTION	QTY	RATE	AMOUNT
1	Aluminum Cones	49	29.50	1,445.50
2	Fixturing and Programming (1 time charge)	3.5	85.00	297.50
		Subtotal		1,743.00
	Sales Tax	GST	5.00%	87.15
		Total	**CAD**	**$1,830.15**

Lab Machine Works Inc.

Quote

From:

Lab Machine Works Inc.
4510-14 street N.E.
Calgary, Alberta
T2E-6T7
Phone: 403-717-9133
Fax: 403-717-9134

February 24, 2011

Quote: 02_24_2011 Aero design

Customer:

Aero design ltd.
2013-39 avenue N.E..
Calgary, AB
T2E-6R7

Att: Ted Burgoin

Quan.	Hours	Description	Unit price	Ext.
50		Machine Aluminum cone. 6061 aluminum material included.	$29.50	$1,475.00
	3.5	Program and fixturing for cones. (One time charge)	$85.00	$297.50
			Sub-total	$1,772.50
			G.S.T.	$88.62
			Total	$1,861.12

- Approx. 2 week delivery upon receipt of order.

Lab Machine Works Inc.

Packing list

From:

Lab Machine Works Inc.
4510-14 st. N.E..
Calgary, Alberta
T2E-6T7
Phone: (403) 717-9133

March 10, 2011

Customer:

Aero design ltd.
2013-39 avenue N.E..
Calgary, AB
T2E-6R7

Ship to:

Att: Jeff Clarke

PO 11027

Qty.	Item#	Description	Qty. shipped	Qty. back ordered
49		Aluminum cones	49	0

AERO Design Ltd.
2013 - 39th Avenue N.E.
Calgary, Alberta, T2E 6R7
Phone: (403) 250-8027
Fax: (403) 250-8333

Purchase Order

P.O. Number	**11026**
Date	22-Feb-11

Vendor:	
Name:	Acklands-Grainger Inc.
Address:	Bay 10, 3401 - 19 St. N.E. Calgary, AB T2E 6S8
Phone:	0
Fax:	0
Attention:	0
Currency:	CAD

Ship To:	
Name:	AERO Design Ltd.
Address:	2013 - 39th Avenue N.E. Calgary, Alberta, T2E 6R7
Phone:	(403) 250-8027
Fax:	(403) 250-8333
Attention:	

ITEM	DESCRIPTION	QTY	RATE	AMOUNT
1	HLC 3591-4CN375 Self Locking Helicoil, 1/4-28 x 0.375 long	200		0.00
		Subtotal		0.00
	Sales Tax	GST	5.00%	0.00
		Total	**CAD**	**$0.00**

ACKLANDS GRAINGER

ACKLANDS – GRAINGER INC.
BAY 10,3401 – 19 STREET NE
CALGARY AB T2E 6S8
(403) 250–7793

ENVOYEZ À / REMIT TO

ACKLANDS – GRAINGER INC.
P.O. BOX 2970
WINNIPEG MB R3C 4B5

PACKING SLIP ONLY
INVOICE TO FOLLOW

PACKING SLIP# 6088 0622218 1

PAGE PAGE NO 1 of 1

FACTURER À / BILL TO

AERO DESIGN LTD
2013 39 AVE NE
CALGARY AB
T2E 6R7

EXPEDIER À / SHIP TO

AERO DESIGN LTD
2013 39 AVE NE
CALGARY AB
T2E 6R7

NO. DU CLIENT CUST. NO.	NO DE REFERENCE DU CLIENT CUST. REF. NO.	NO. DE LICENSE PROVINCIALE P.S.T. LIC. NO.	NO. DU CONTRAT CONTRACT NO.	EXP. DIRECTE DIR. SHIP	DATE DE LA COMMANDE ORDER DATE	DATE DE LA FACTURE INVOICE DATE
320177 3201779	11026			N	02/22/2011	04/01/2011

VENDEUR SALESPERSON	TERMES TERMS	NO.DE VERSEMENTS NO. OF PMTS.	M.E.P. M.B.P.	DATE DU PREMIER VERSEMENT FIRST PAYMENT DATE		APP. DE CREDIT CREDIT AUTH	S'APPLIQUE AU NO.DE FACTURE APPLY TO INVOICE NO.	RC/ B.O./SUB.	COPIES	T.P.S/G.S.T.
999	*** NET 30 ***	0	0		00/00/0000 10:55					

ORDER DE COMMANDE ORDER SEQ. / ORDRE DE TABLETTE BIN LOCATION	CODE DU MAN. MFG CODE	NO. DE PIECE ITEM NO. / DESCRIPTION	PRIX DE LISTE SUGG. LIST	QUANTITE COMMANDEE QUANTITY ORDERED	QUANTITE EXPEDIEE QUANTITY SHIPPED	CODE DE COMM. DIFF B.O. CODE	UNITE DE MESURE DE COMMANDE ORDER UNIT OF MEASURE	PRIX PRICE PAR PER	PRIX PRICE ESC DIS	PRIX EXTENSIONNE EXTENDED PRICE	T.P.S. T.
		HLC 3591-4CN375 INSERT SCREW-LOCK 1/4-28X375		200	200		EA				YYY
		ORIGINAL B.O. QTY: 200, STILL TO COME: 0									
		JEFF									
		403-250-8027									
		FILLS BACKORDER FROM INVOICE# 0619996,DATED 03/03/2011									

GST# 88970–1272/TVQ# 1019602903

SOUS TOTAL / SUB TOTAL

EXPEDITEUR SHIP VIA	FACT D'EXPED SHIP INV	EXPEDITION COMP SHIP COMPLETE	PORT PAYE PPD FREIGHT	DATE DE LIVRAISION REQUISE REQUESTED DELIVERY	CONNAISSEMENT BILL OF LADING	CODE DE COMM. DIF. B.O. CODE		T.P.S / T.V.H G.S.T./H.S.T. TAXE PROV PROV. TAX
CUSTOMER PICK UP						B – B.O COMMANDE DIF. C– ANNULEE CANCEL D– EXP DIRECTE DIR. SHIP	9275	

COMMANDE PAR ORDER TAKEN	COMMANDE REMPLIE PAR ORDER FILLED	VERIFIEE PAR CHECKED	EXPEDIEE PAR SHIPPED
881			

RECU PAR RECEIVED BY

MONTANT TOTAL TOTAL AMOUNT

FORM 7989–1

COPIE DU CLIENT
CUSTOMER COPY

SALES, FREIGHT AND WARRANTY TERMS AND CONDITIONS

SALES POLICY

WHOLESALE ONLY. Acklands-Grainger Inc. ("Acklands-Grainger") offers its products ("Products") for sale to all buyers ("Buyers") for use or consumption in Canada, and only in accordance with manufacturers' specifications, requirements, recommendations and warranties. Business identification is required from all Buyers. Possession of a catalogue does not constitute the right to purchase from Acklands - Grainger.

PRICES are subject to change without notice.

SALES TAX. Acklands-Grainger is required to charge federal, provincial and local taxes and levies on every item for which a sales tax exemption certification has not been provided. When ordering, please provide your valid exemption certificate and indicate which items are tax exempt.

PAYMENT TERMS. For Buyers with established credit, terms are net thirty (30) days from date of shipment. If credit is not established, please include payment with order or purchase through Visa, MasterCard or American Express. All payments must be in Canadian dollars. Acklands-Grainger shall have the right to set-off and deduct for any sums owed. If Buyer fails to make payment within thirty (30) days, Acklands-Grainger may defer shipments until such payment is made, or may, at its option, cancel all or any part of unshipped order. Interest will be charged on overdue accounts at 2% per month (26.82% per annum).

CREDIT BALANCE. Buyer agrees that any credit balance issued will be applied within one (1) year of its issuance. IF NOT APPLIED OR REQUESTED WITHIN ONE (1) YEAR, ANY BALANCE REMAINING WILL BE SUBJECT TO CANCELLATION, AND ACKLANDS-GRAINGER SHALL HAVE NO FURTHER LIABILITY.

FREIGHT POLICY. Acklands-Grainger will arrange and pay for freight to destinations in Canada only, except for orders less than $100 to which freight charges will apply.

TITLE AND RISK OF LOSS. Title and risk of loss in the Products sold hereunder pass to Buyer at time of shipment from Acklands-Grainger. If Product is damaged in transit, Buyer must file a claim with the carrier. If goods are undeliverable for 2 days, carrier will return goods to Acklands-Grainger and additional charges may apply.

ORDER FOR EXPORT BY BUYER. Acklands-Grainger's policy is to offer Products only for delivery, use and resale within Canada. Buyer shall immediately notify Acklands-Grainger in writing if any order for Product is intended for export from Canada. Acklands-Grainger has discretion as to whether to accept or reject such orders. In any event, Buyer acknowledges that Acklands-Grainger is prevented under contract from selling Products for delivery in the United States, Mexico, the Caribbean, the Persian Gulf region, the People's Republic of China, the United Arab Emirates, Saudi Arabia or Japan. Buyer represents that it shall not export Products purchased from Acklands-Grainger to such countries. Where Products purchased from Acklands-Grainger are to be exported, Buyer assumes sole responsibility for arranging the export of the Products from Canada and their importation into other countries and shall at all times comply with all applicable laws in relation thereto, including but not limited to export control laws, rules and regulations of Canada. Acklands-Grainger will not be the exporter under any circumstances. Buyer shall not export Product purchased from Acklands-Grainger without first obtaining all necessary written consents, permits and authorizations and completing such formalities as may be required by any such laws, rules and regulations. Buyer further represents and warrants that it will not export or divert Products to any country or to any person to which or to who export from Canada is prohibited under applicable laws, rules and regulations.

ACKLANDS-GRAINGER LIMITED WARRANTY

LIMITED WARRANTY. THE WARRANTY AND RETURN POLICY FOR ALL PRODUCTS ARE DETERMINED BY THE ORIGINAL EQUIPMENT MANUFACTURER AND/OR SUPPLIER. ALL PRODUCTS SOLD BY ACKLANDS-GRAINGER ARE WARRANTED ONLY TO THE EXTENT OF THE MANUFACTURER'S / SUPPLIER'S WARRANTY, AND ONLY TO BUYERS FOR RESALE OR FOR USE IN THEIR BUSINESS IN CANADA. PRODUCTS ARE WARRANTED AGAINST DEFECTS IN WORKMANSHIP OR MATERIALS IN ACCORDANCE WITH THE INDIVIDUAL MANUFACTURER'S WARRANTY POLICY. MANUFACTURERS OF CERTAIN PRODUCTS, SUCH AS FASTENERS, DO NOT PROVIDE A WARRANTY PERIOD. ANY PART WHICH IS DETERMINED BY ACKLANDS-GRAINGER TO BE DEFECTIVE IN MATERIAL OR WORKMANSHIP AND RETURNED TO AN ACKLANDS-GRAINGER BRANCH OR AUTHORIZED SERVICE LOCATION AS ACKLANDS-GRAINGER DESIGNATES, SHIPPING COSTS PREPAID, WILL BE, AS THE BUYER'S EXCLUSIVE REMEDY, REPAIRED OR REPLACED AT ACKLANDS-GRAINGER'S SOLE OPTION.

WARRANTY DISCLAIMER. ACKLANDS-GRAINGER HAS MADE A DILIGENT EFFORT TO ILLUSTRATE AND DESCRIBE THE PRODUCTS IN ITS CATALOGUES ACCURATELY; HOWEVER, SUCH ILLUSTRATIONS AND DESCRIPTIONS ARE FOR THE SOLE PURPOSE OF IDENTIFICATION, AND DO NOT EXPRESS OR IMPLY A WARRANTY OR CONDITION THAT THE PRODUCTS ARE MERCHANTABLE, OR FIT FOR A PARTICULAR PURPOSE OR THAT THE PRODUCTS WILL NECESSARILY CONFORM TO THE ILLUSTRATIONS OR DESCRIPTIONS. THE PRODUCTS ARE SOLD TO BUYER ON AN "AS IS, WHERE IS" BASIS, AND NO WARRANTY OR CONDITION OR AFFIRMATION OF FACT, EXPRESS OR IMPLIED, OTHER THAN AS SET FORTH IN THE LIMITED WARRANTY ABOVE, IS MADE OR AUTHORIZED BY ACKLANDS-GRAINGER. ANY AND ALL REPRESENTATIONS AND WARRANTIES, EXPRESS OR IMPLIED, LEGAL, STATUTORY, CONVENTIONAL OR OTHERWISE WITH RESPECT TO THE PRODUCTS (INCLUDING IMPLIED WARRANTIES AS TO MERCHANTABILITY OR FITNESS FOR A PARTICULAR PURPOSE) WHETHER PURSUANT TO THE *SALE OF GOODS ACT* OF ANY PROVINCE OR OTHERWISE, ARE HEREBY EXPRESSLY EXCLUDED AND DISCLAIMED.

LIMITATION OF LIABILITY. ANY LIABILITY FOR INDIRECT, CONSEQUENTIAL OR INCIDENTAL DAMAGES IS EXPRESSLY DISCLAIMED BY ACKLANDS-GRAINGER. ACKLANDS-GRAINGER'S LIABILITY IN ALL EVENTS FOR ALL DAMAGES, LOSSES AND CAUSES OF ACTION (WHETHER IN CONTRACT, TORT (INCLUDING NEGLIGENCE) OR OTHERWISE) SHALL BE LIMITED IN THE AGGREGATE TO, AND SHALL NOT EXCEED, THE PURCHASE PRICE PAID FOR THE PRODUCTS IN QUESTION.

CYLINDER LEASE/GAS SUPPLY SALES. The Buyer agrees to indemnify and save harmless Acklands-Grainger of and from any damage to or loss of any cylinder or mini-bulk container leased to them. The Buyer also agrees to indemnify and hold Acklands-Grainger harmless from and against any claims and demands of any nature whatsoever for loss or damage to property or injury to persons, including death, resulting therefrom, at any time caused directly or indirectly by or through the presence, transport or use of any cylinder or mini-bulk container or gas, except any such loss or damage resulting solely from the negligence of Acklands-Grainger or its employees or servants. The liability of Acklands-Grainger shall be limited at all times as provided under the Limitation of Liability section above.

PROMPT DISPOSITION. Acklands-Grainger will make a good faith effort for prompt correction or other adjustment with respect to any Product which proves to be defective within the warranty period.

PRODUCT SUITABILITY. Many provinces and localities have laws, codes and regulations governing sales, construction, installation and/or use of products for certain purposes, which may vary from those in neighboring areas. While Acklands-Grainger attempts to ensure that its Products comply with such codes, it cannot guarantee compliance, and cannot be responsible for how Products are installed or used. Before purchase and use of a Product, please review the Product application and applicable national, provincial and local laws, codes and regulations to ensure that the Product and its installation and use will comply with them.

HAZARDOUS MATERIALS INFORMATION. Acklands-Grainger has obtained Materials Safety Data Sheets ("MSDS") for all "controlled products" within the meaning of the relevant legislation in respect of Products offered for sale by Acklands-Grainger. The MSDS in question conform with the requirements of provincial occupational health and safety legislation which regulates "hazardous material" and the applicable Workplace Hazardous Materials Information Systems Regulations made thereunder. Such MSDS are available at local Acklands-Grainger branches and will be provided to the Buyer of any such Product at the time of sale. The information and recommendations contained in the applicable MSDS supplied/prepared by the manufacturer are considered to be accurate and reliable. However, Acklands-Grainger makes no warranty with respect to the accuracy or reliability of the information or the suitability of the recommendations. Acklands-Grainger disclaims any and all liability to any user thereof.

ADDITIONAL TERMS

FORCE MAJEURE. Acklands-Grainger shall not be liable for any damage, cost or loss of profit of Buyer or delay in or impairment of performance resulting in whole or in part from acts of God, labour disruption, shortages, inability to procure product, supplies or raw materials, severe weather conditions, or any other circumstances or cause beyond the control of Acklands-Grainger in the conduct of its business.

CANCELLATION OR RETURN. Any cancellation or return must be approved by Acklands-Grainger, and may be subject to restocking and other charges. Before returning any Product, write or call the Acklands-Grainger location from which the Product was purchased, giving the date and number of original invoice and describing the defect. The Acklands-Grainger branch will give instruction as to the method of returning the Product. For returns not related to damage or loss during shipping, Product must be returned within 30 days of shipment and be in original package and resaleable condition. Acklands-Grainger will only accept returns on Products shown in this catalogue (unless for damage during shipping). Some exceptions may apply. No returns can be accepted for special order items.

ASSIGNMENT. Buyer shall not assign any order or any interest therein without the written consent of Acklands-Grainger. Any actual or attempted assignment without Acklands-Grainger's prior written consent shall entitle Acklands-Grainger to cancel such order upon notice to Buyer.

MODIFICATION OF TERMS. Acklands-Grainger's acceptance of any order is subject to Buyer's assent to all of the terms and conditions set forth in Acklands-Grainger's acknowledgement, and Buyer's assent to these terms and conditions shall be presumed from Buyer's receipt of Acklands-Grainger's acknowledgement, or from Buyer's acceptance of all or any part of the Products or services ordered. No addition or modification of terms and conditions shall be binding on Acklands-Grainger unless agreed to by Acklands-Grainger in writing. If a purchase order or other correspondence contains terms or conditions contrary to the terms and conditions contained in Acklands-Grainger's acknowledgement, Acklands-Grainger's acceptance of any order shall not be construed as assent to any additional terms and conditions, nor will that constitute a waiver by Acklands-Grainger of any of the terms and conditions contained in Acklands-Grainger's acknowledgement.

COMPLETE AGREEMENT. The terms and conditions in Acklands-Grainger's forms, acknowledgement, quotations, invoice and catalogue sales terms and conditions are incorporated herein by reference and constitute the entire and exclusive agreement between Buyer and Acklands-Grainger.

CONDITIONS DE VENTE ET DE TRANSPORT ET GARANTIE

POLITIQUE DE VENTE

VENTE EN GROS SEULEMENT. Acklands-Grainger Inc.("Acklands-Grainger") offre ces produits ("Produits") pour la vente à tous les acheteurs ("Acheteurs") pour utilisation ou consommation au Canada et seulement en conformité avec les spécifications, les exigences, les recommendations et les garanties du fabricant. Une identification d'entreprise d'affaires est requise de tous les Acheteurs. Le fait d'être en possession d'un catalogue d'Acklands-Grainger ne donne pas le droit d'acheter de nous.

LES PRIX sont sujets à changement sans préavis.

TAXE DE VENTE. Acklands-Grainger est tenue de percevoir les taxes fédérales, provinciales et locales pour les articles qui n'en sont pas exemptés. Au moment de passer votre commande, veuillez indiquer clairement l'existence de tout certificat d'exemption et les articles qui sont exemptés.

CONDITIONS DE PAIEMENT. Pour les acheteurs dont la cote de crédit est établie, le terme est «net dans 30 jours» à compter de la date de l'expédition. À défaut d'avoir une cote de crédit établie, veuillez inclure votre paiement avec votre commande ou votre achat au moyen de la carte Visa, MasterCard ou American Express. Tous les paiements doivent être effectués en dollars canadiens. Acklands-Grainger a le droit de compenser et de déduire toute somme due par le client. Si le client ne règle pas la facture dans les trente (30) jours, Acklands-Grainger peut reporter l'expédition jusqu'au règlement ou, à son choix, annuler toute commande non expédiée, en totalité ou en partie. Les comptes en souffrance portent intérêt au taux de 2% par mois (26,82% par année).

NOTES DE CRÉDIT. Les acheteurs conviennent d'utiliser toute note de crédit dans l'année qui suit son émission. UNE NOTE NON UTILISÉE OU DEMANDÉE DANS UN DÉLAI D'UN (1) AN PEUT ÊTRE ANNULÉE, AUQUEL CAS ACKLANDS-GRAINGER N'AURA PLUS AUCUNE OBLIGATION À CET ÉGARD.

POLITIQUE DE TRANSPORT. Acklands-Grainger s'occupera du transport et paiera les frais de transport pour les destinations au Canada seulement, à l'exception des commandes de moins de 100.00$ pour lesquelles des frais de transport sont applicables.

TITRE DE PROPRIÉTÉ ET RISQUE DE PERTE. Le titre de propriété et le risque de perte des produits vendus vendus aux termes des présentes sont transférés à l'Acheteur immédiatement à la suite de l'expédition de l'emplacement d'Acklands-Grainger. Si un produit est endommagé en cours de transport, l'Acheteur doit effectuer une réclamation au transporteur. Si un produit ne peut être livré dans les 2 jours suivant l'expédition, le transporteur retournera le produit à Acklands-Grainger et des frais supplémentaires pourraient alors s'appliquer.

COMMANDE POUR EXPORTATION PAR L'ACHETEUR. La politique d'Acklands-Grainger est d'offrir des produits pour la livraison, l'utilisation et la revente au Canada seulement. L'Acheteur s'engage à informer immédiatement Acklands-Grainger par écrit si une commande de produits est destinée pour exportation hors du Canada. Acklands-Grainger se réserve la discrétion de soit accepter ou refuser ces commandes. Dans tous ces cas, l'Acheteur accepte et reconnaît qu'Acklands-Grainger est interdit sous contrat de vendre des produits pour livraison aux États-Unis, au Mexique, dans les Caraïbes, dans la région du golfe Persique, la République de Chine, aux Émirats Arabes Unis, en Arabie Saoudite ou au Japon. L'Acheteur accepte et s'engage à ne pas exporter des produits achetés d'Acklands-Grainger vers ces pays. Lorsque des produits achetés d'Acklands-Grainger sont à être exportés, l'Acheteur assume l'entière responsabilité d'organiser l'exportation des produits du Canada et de leur importation dans d'autres pays et se conformera en tout temps avec toutes les lois applicables en relation avec les produits et leur transport, incluant mais non limité aux lois régissant le contrôle des exportations, les conditions et règlements du Canada. Acklands-Grainger ne sera pas indiqué ou nommé comme exportateur sous aucune circonstance. L'Acheteur n'exportera pas de produits achetés d'Acklands-Grainger sans obtenir au préalable toutes les permissions nécessaires requises, les permis et les autorisations et de remplir toutes les formalités qui peuvent être requises selon les lois et les règlements applicables. L'Acheteur accepte et s'engage de plus et garantit qu'il n'exportera ou ne détournera pas des produits achetés d'Acklands-Grainger à tout pays ou à toute personne dont l'exportation du Canada est prohibée par les lois et règlements applicables.

GARANTIE LIMITÉE D'ACKLANDS-GRAINGER

GARANTIE LIMITÉE. LA GARANTIE ET LA POLITIQUE CONCERNANT LES RETOURS DE TOUS LES PRODUITS SONT ÉTABLIES PAR LE FABRICANT OU LE FOURNISSEUR D'ORIGINE. TOUS LES PRODUITS VENDUS PAR ACKLANDS-GRAINGER INC. NE SONT GARANTIS QU'EN VERTU DE LA GARANTIE DE LEUR FABRICANT OU FOURNISSEUR. CETTE GARANTIE SE LIMITE À CEUX QUI EN FONT L'ACHAT AUX FINS DE REVENTE OU D'UTILISATION DANS LEURS PROPRES ACTIVITÉS AU CANADA. LES PRODUITS VENDUS SONT GARANTIS CONTRE LES VICES DE FABRICATION CONFORMÉMENT À LA GARANTIE DE LEUR FABRICANT. LES FABRICANTS DE CERTAINS PRODUITS, TELS DES PRODUITS DE FIXATION, N'OFFRENT PAS DE PÉRIODE DE GARANTIE TOUTE PIÈCE QUI, SELON ACKLANDS-GRAINGER, PRÉSENTE UN VICE OU UN DÉFAUT DE FABRICATION ET QUI EST RETOURNÉE À UNE SUCCURSALE OU À UN CENTRE DE SERVICES AUTORISÉ D'ACKLANDS-GRAINGER, SELON SES INSTRUCTIONS, AVEC FRAIS DE TRANSPORT PORT PAYÉ, SERA REPARÉE OU REMPLACÉE, SELON LE SEUL CHOIX D'ACKLANDS-GRAINGER, CE QUI CONSTITUERA LE SEUL RECOURS DE L'ACHETEUR.

EXONÉRATION DE RESPONSABILITÉ CONCERNANT LA GARANTIE. ACKLANDS-GRAINGER A FAIT DILIGENCE POUR ILLUSTRER ET DÉCRIRE DE FAÇON AUSSI EXACTE QUE POSSIBLE LES PRODUITS QUI FIGURENT DANS SES CATALOGUES. CELA DIT, CES ILLUSTRATIONS ET DESCRIPTIONS NE VISENT QUE DES FINS D'IDENTIFICATION ET N'IMPLIQUENT AUCUNE GARANTIE NI AFFIRMATION QUE LES PRODUITS EN QUESTION SONT DE QUALITÉ MARCHANDE OU QU'ILS CONVIENNENT À UNE UTILISATION SPÉCIFIQUE OU ENCORE QU'ILS CORRESPONDENT NÉCESSAIREMENT AUX ILLUSTRATIONS OU DESCRIPTIONS. LES PRODUITS SONT VENDUS À L'ACHETEUR «TELS QUELS, LÀ OÙ ILS SE TROUVENT», ET ACKLANDS-GRAINGER NE LES ASSORTIT D'AUCUNE GARANTIE, CONDITION OU AFFIRMATION, EXPLICITE OU IMPLICITE, AUTRE QUE LA GARANTIE LIMITÉE CI-DESSUS. LES AFFIRMATIONS ET GARANTIES, EXPLICITES OU IMPLICITES, LÉGALES, CONVENTIONNELLES OU AUTRES, AYANT TRAIT AUX PRODUITS (Y COMPRIS LES GARANTIES IMPLICITES DE QUALITÉ MARCHANDE OU DE CONVENANCE À UNE UTILISATION SPÉCIFIQUE) AUX TERMES D'UNE LOI RÉGISSANT LA VENTE DE PRODUITS DE CHAQUE PROVINCE OU DE TOUT TERRITOIRE, SONT EXPRESSÉMENT EXCLUES.

LIMITATION DE LA RESPONSABILITÉ. ACKLANDS-GRAINGER N'ENGAGE AUCUNE RESPONSABILITÉ À L'ENDROIT DES DOMMAGES INDIRECTS OU ACCESSOIRES. LA RESPONSABILITÉ D'ACKLANDS-GRAINGER À L'ÉGARD DE TOUS PRÉJUDICES OU CAUSES D'ACTION (DE NATURE CONTRACTUELLE OU DÉLICTUELLE, Y COMPRIS LA NÉGLIGENCE) EST À TOUT ÉVÉNEMENT LIMITÉE AU PRIX D'ACHAT DES PRODUITS EN CAUSE.

LOCATION DE BOUTEILLES/VENTES DE GAZ. L'acheteur convient de tenir Acklands-Grainger à couvert de toute responsabilité à l'égard de tout dommage ou perte subi par une bouteille ou un minicontenant de produit en vrac qui lui est loué, ainsi qu'à l'égard de toute demande d'indemnisation ou de réclamation sur la propriété de biens ou pour blessures subies, y compris la mort, ou des dommages de quelque nature que ce soit découlant, directement ou indirectement, de la présence, du transport ou de l'utilisation d'une bouteille ou d'un minicontenant de produit en vrac ou de gaz, sauf si le préjudice est exclusivement imputable à la négligence d'Acklands-Grainger ou de ses employés et préposés. La responsabilité d'Acklands-Grainger est à tout événement limitée conformément à la clause intitulée Limitation de la responsabilité ci-dessus.

INTERVENTION RAPIDE. Acklands-Grainger veillera, de bonne foi, à intervenir sans délai en cas de défectuosité d'un produit au cours de la période de garantie.

CONFORMANCE DU PRODUIT. De nombreuses provinces et municipalités ont adopté leurs propres lois, codes ou règlements régissant la vente, la fabrication, l'installation ou l'utilisation de produits destinés à certains usages. Tout en veillant à ce que ses produits se conforment à de telles réglementations, Acklands-Grainger ne peut en garantir la conformité et n'engage aucune responsabilité pour la façon dont ses produits sont utilisés ou installés. Avant d'acheter et d'utiliser un produit, veuillez prendre connaissance de son usage recommandé ainsi que des lois, codes et des règlements applicables à l'échelle nationale, provinciale et locale, en vous assurant que le produit de même que son installation et son utilisation les respectent.

INFORMATION SUR LES MATIÈRES DANGEREUSES. Acklands-Grainger a obtenu des Fiches signalétiques de sécurité de produit (FS) pour tous les "produits sous contrôle" qui tombent sous la désignation et signification de la législation pertinente en rapport avec les produits offerts pour la vente par Acklands-Grainger. Les Fiches signalétiques en question sont conformes avec les exigences des lois provinciales en matière de santé et sécurité au travail qui réglementent les "matières dangereuses" et la réglementation en vigueur pour le Système d'information sur les matières dangereuses utilisées au travail (SIMDUT). Ces Fiches signalétiques sont disponibles dans les succursales locales d'Acklands-Grainger et seront fournies à tout Acheteur de ces produits au moment de la vente. L'information et les recommandations contenues aux Fiches signalétiques applicables fournies et préparées par le fabricant sont considérées exactes et fiables. Toutefois, Acklands-Grainger n'émet aucune garantie et n'engage aucune responsabilité quant à l'exactitude ou la fiabilité de l'information, ou de la pertinence des recommendations de la part du fabricant. Acklands-Grainger rejette et refuse toute responsabilité envers tout utilisateur concerné.

CONDITIONS SUPPLÉMENTAIRES

FORCE MAJEURE. Acklands-Grainger n'engage aucune responsabilité pour tout dommage, frais ou perte de profit de l'Acheteur ou pour tout retard ou inexécution imputable à la force majeure, un conflit de travail, une pénurie, l'incapacité de se procurer un produit, des fournitures ou des matières premières, des perturbations climatiques ou tout autre circonstance ou cause attribuable à un événement indépendant de sa volonté dans l'exploitation de son entreprise.

ANNULATIONS ET RETOURS. Toute annulation ou tout retour doit être autorisé par Acklands-Grainger et peut être assujetti à des frais de restockage ou d'autres frais. Avant de retourner un produit, veuillez communiquer par téléphone ou par écrit avec la succursale d'Acklands-Grainger où le produit a été acheté, en fournissant la date et le numéro de la facture originale et en précisant la défectuosité. La succursale vous dira comment retourner le produit. Pour des retours de produits non reliés à des dommages ou pertes lors de l'expédition, le produit doit être retourné dans les 30 jours de l'expédition dans son emballage original et en état de revente. Acklands-Grainger n'acceptera le retour que des articles qui figurent dans le présent catalogue (sauf en cas de dommage lors de l'expédition). Certaines exceptions peuvent s'appliquer. Aucun retour n'est permis ou accepté pour des articles de commandes spéciales.

CESSION. L'acheteur ne peut céder une commande ou un droit sur celle-ci sans le consentement par écrit d'Acklands-Grainger. En cas de cession ou de tentative de cession sans le consentement préalable par écrit d'Acklands-Grainger autorise Acklands-Grainger à annuler la commande sur préavis à l'acheteur.

MODIFICATIONS. L'acceptation d'une commande par Acklands-Grainger est dans tous les cas conditionnelle à l'acceptation par l'acheteur des modalités et conditions qui figurent dans l'accusé de réception d'Acklands-Grainger. L'acceptation de l'acheteur est présumée par la réception par celui-ci de l'accusé de réception d'Acklands-Grainger ou par son acceptation d'un produit ou d'un service commandé, en totalité ou en partie. Aucun ajout ou modification aux modalités et conditions ne lie Acklands-Grainger à moins qu'elle n'y ait consenti par écrit. Si un bon de commande ou un écrit renferme des modalités ou conditions contraires à celles qui figurent dans l'accusé de réception d' Acklands-Grainger, l'acceptation d'une commande ne constitue pas l'acceptation des modalités ou conditions supplémentaires ni la renonciation par Acklands-Grainger aux modalités et conditions qui figurent dans l'accusé de réception.

INTÉGRALITÉ. Les modalités et conditions qui figurent dans les formulaires, accusés de réception, soumissions, factures et catalogues sont incorporées par renvoi aux présentes et représentent l'entente intégrale intervenue entre l'acheteur et Acklands-Grainger.

Bordereau d'expédition, Modalités et Conditions 07 mars 2006

AERO Design Ltd.
2013 - 39th Avenue N.E.
Calgary, Alberta, T2E 6R7
Phone: (403) 250-8027
Fax: (403) 250-8333

Purchase Order

P.O. Number	**11022**
Date	15-Feb-11

Vendor:	
Name:	Thyssen Krupp
Address:	19044 - 95A Avenue Surrey BC V4N 4P2
Phone:	604-822-3493 ext. 14020
Fax:	800-926-2600
Attention:	Timothy Skidmore
Currency:	CAD

Ship To:	
Name:	AERO Design Ltd.
Address:	2013 - 39th Avenue N.E. Calgary, Alberta, T2E 6R7
Phone:	(403) 250-8027
Fax:	(403) 250-8333
Attention:	Jeff Clarke

ITEM	DESCRIPTION	QTY	RATE	AMOUNT
1	6061-T6 Aluminum Bar, 4" x 1" x 144"	4	141.12	564.48
2	6061-T6 Aluminum Bar, 6" x 1" x 144"	2	211.68	423.36
	Fuel surcharge	2	7.42	14.84
		Subtotal		1,002.68
	Sales Tax	GST	5.00%	50.13
		Total	**CAD**	**$1,052.81**

ThyssenKrupp Materials NA.
Copper and Brass Sales Division

ThyssenKrupp

ThyssenKrupp Materials NA 19044 95A Avenue, Surrey, BC V4N 4P2

DELIVERY NOTE

AERO DESIGN LTD.
2013 39 AVE NE
CALGARY AB T2E 6R7

DATE:	02/22/2011
DOC. NO:	2401125410*
ORDER NO:	1400729922
YOUR P/O:	11022
CUSTOMER NO:	10016771
Route:	**B8MB9**
CONTACT:	Travis Wilson
TEL:	604-881-4009
FAX:	604-882-0686
EMAIL:	Travis.Wilson@thyssenkrupp.com

* please state on all documents

SHIP TO: 2013-39TH AVENUE N.E.
SHIP TO: CALGARY, AB, T2E 6R7

We deliver at your own risk and account in accordance with our general delivery and payment terms.

ITEM	DESCRIPTION	NET QTY1 / QTY2	PACKAGE NO.
0010	ALREC00023	24	1001521181
	6061 - T6511 Aluminum Extruded Rectangular	Feet	
	1.00000 (+ -.012) X 6.0000 (+ -.044) X 144 Mill Length	169.200 lb	
	ASTM B 221|2008 ROHS COMPLIANT SAE AMS-QQ-A-200/8|1997		
	Nominal Chemistry/Act Physical		
	Standard Packaging		
	Customer Order No: 11022		

Tag	Qty	UOM	Vendor	Vend PO	Heat/Lot	PCS
1001536714	24	FT	KAISER ALU	5400092805	65026 040	2

Total Gross Weight **171.200 lb**

All items, not declared as partial delivery, are final quantities.
Delivery Terms: PPD gem. Incoterms 2000 Best Way

CERTIFICATION OF COMPLIANCE

We hereby certify that mercury or any of its compounds are not used in the processing and distribution of our products. The products we distribute are not hazardous in their received state.

For MSDS sheets go to www.copperandbrass.com/msds or call 248-233-5862. We hereby certify that the material above complies with the above specifications

Rush D. Williams - Director Quality Improvement Board

Rush D. Williams

Copper and Brass Sales
22355 W 11 Mile Road
Southfield, MI 48033

KAISER ALUMINUM
FABRICATED PRODUCTS

Best in Class

CERTIFIED TEST REPORT

http://Certs.KaiserAluminum.com

KAISER ALUMINUM
FABRICATED PRODUCTS, LLC
6250 EAST BANDINI BLVD
LOS ANGELES, CA 90040-3168

CUSTOMER PO NUMBER:	CUSTOMER PART NUMBER:	PRODUCT DESCRIPTION:
5400092805-30	ALREC00023	1.000 X 6.000 PRECISION WIDE BAR

KAISER ORDER NUMBER:	LINE ITEM:	SHIP DATE:	KAISER LOT NUMBER:	ALLOY:	TEMPER:
5002386	030	01/28/2011	65026 040	6061	T6511B
WEIGHT SHIPPED:	QUANTITY:	B/L NUMBER:	DIAM/DAF/THKNS:	WIDTH:	LENGTH:
931.000 LB	11.000 PCS	526244			12.000 FT

SHIP TO:	SOLD TO:
THYSSENKRUPP MATERIALS NA COPPER & BRASS SALES DIVISION 19044 95A AVENUE SURREY, CA CANADA, V4N 4P2 CANADA	COPPER & BRASS SALES PO BOX 5116 SOUTHFIELD, MI 48086-5116 USA

Actual Physical Properties

REFERENCE	DASH#	SAMPLE#	UTS(KSI)	YTS(KSI)	ELONG%	HARDNESS	CONDUCT.	BEND
65026 040	0001	0001	50.8	47.4	19.8	RE 97	N/A	N/A
65026 040	0001	0002	48.8	44.5	18.0	RE 98	N/A	N/A

Chemical Composition (wt%), Aluminum Remainder

LIMITS	Si	Fe	Cu	Mn	Mg	Cr	Zn	Ti	Pb	Bi	Zr	Ea	Tot
Maximum	0.8	0.7	0.40	0.15	1.2	0.35	0.25	0.15	NA	NA	NA	0.05	0.15
Minimum	0.40		0.15		0.8	0.04			NA	NA	NA		

Applicable Requirements:

PER ASTM-B221-08, STENCILED ASME-SB221 1998 SECT II PER AMS-QQ-A-200/8 UNS#6061 MEETS ALL SPECIFICATION REQUIREMENTS FOR 6061-T6511/T6 ELEVATED MINIMUM MECHANICAL PROPERTIES AS FOLLOWS: UTS = 42.0 KSI MIN YIELD = 38.0 KSI MIN ELONGATION = 10.0% MIN

Miscellaneous Notes

MANUFACTURED IN USA MELTED IN USA

CERTIFICATION

Kaiser Aluminum Fabricated Products, LLC hereby certifies that metal shipped under this order has been inspected and tested and found in conformance with applicable specifications forming a part of the description set forth in Kaiser's sales acknowledgement form. Any warranty is limited to that shown on Kaiser's general terms and conditions of sale. Test reports are on file, subject to examination.

Mark Shelley, Quality Manager

Mark Shelley

Plant Serial: 00198863

Kaiser Order Number: 5002386

Line Item: 030

ThyssenKrupp Materials NA
Copper and Brass Sales Division

ThyssenKrupp

ThyssenKrupp Materials NA 19044 95A Avenue, Surrey, BC V4N 4P2

DELIVERY NOTE

AERO DESIGN LTD.
2013 39 AVE NE
CALGARY AB T2E 6R7

DATE:	02/22/2011
DOC. NO:	2401122265*
ORDER NO:	1400729922
YOUR P/O:	11022
CUSTOMER NO:	10016771
Route:	**B8MO8**
CONTACT:	Travis Wilson
TEL:	604-881-4009
FAX:	604-882-0686
EMAIL:	Travis.Wilson@thyssenkrupp.com

* please state on all documents

SHIP TO: 2013-39TH AVENUE N.E.
SHIP TO: CALGARY, AB, T2E 6R7

We deliver at your own risk and account in accordance with our general delivery and payment terms.

ITEM	DESCRIPTION	NET QTY1 / QTY2	PACKAGE NO.
0010	ALREC00750	48	1001514209
	6061 - T6511 Aluminum Extruded Rectangular	Feet	
	1.00000 (+ -.012) X 4.0000 (+ -.034) X 144 Mill Length	225 lb	
	ASTM B 221|2008 ROHS COMPLIANT SAE AMS-QQ-A-200/8|1997		
	Nominal Chemistry/Act Physical		
	Standard Packaging		
	Customer Order No: 11022		

Tag	Qty	UOM	Vendor	Vend PO	Heat/Lot	PCS
2000244845	48	FT			145540-4/1A	4

Total Gross Weight **225 lb**

All items, not declared as partial delivery, are final quantities.
Delivery Terms: PPD gem. Incoterms 2000 Best Way

CERTIFICATION OF COMPLIANCE

We hereby certify that mercury or any of its compounds are not used in the processing and distribution of our products. The products we distribute are not hazardous in their received state.

For MSDS sheets go to www.copperandbrass.com/msds or call 248-233-5862. We hereby certify that the material above complies with the above specifications

Rush D. Williams - Director Quality Improvement Board

Rush D. Williams

Copper and Brass Sales
22355 W 11 Mile Road
Southfield, MI 48033

FORM: 1002 WORKORDER: 2401122265

COPPER AND BRASS SALES

MATERIAL TYPE

ALUMINIUM ALLOYS

PRODUCT DESIGNATION

1100 1350 3003 3004 3105 5005 5083 5086 5182 5454 6061 6063

"WARNING"

SMALL CHIPS, FINE TURNINGS AND DUST MAY IGNITE READILY. EXPLOSIONPOTENTIAL MAY BE PRESENT WHEN:DUST OR FINES ARE DISPERSED IN THE AIR; FINE, DUST OR MOLTEN ALUMINUMARE IN CONTACT WITH CERTAINMETAL OXIDES; OR, CHIPS, FINES, DUST OR MOLTEN ALUMINUM ARE IN CONTACT WITH WATER OR MOISTURE. KEEP AWAY FROM IGNITION SOURCE. USE EXPLOSION- PROOF VENTILATION. KEEP MATERIAL DRY.

INHALING LARGE AMOUNTS OF COPPER, MAGNESIUM OXIDE, MANGANESE OXIDE, AND ZINC OXIDE FUMES OR DUST MAY CAUSE METAL FUME FEVER WITH FLU-LIKE SYMPTOMS. CHRONIC OVEREXPOUSURE TO COPPER MAY CAUSE THICKENING OF THE SKIN; AND SKIN,TEETH,AND HAIR DISCOLORATION. CHRONIC OVEREXPOUSURE TO MANGANESE DUST CAN CAUSE CENTRAL NERVOUS SYSTEM DAMAGE,SCARRING OF THE LUNGS AND REPRODUCTIVE HARM IN MALES.TARGET ORGAN IS PRIMARILY THE LUNG,BUT REPEATED HIGH EXPOSURE CAN ALSO AFFECT THE LIVER.CHRONIC OVEREXPOSURE TO TIN DUST OR IRON OXIDE DUST/FUME MAY CAUSE LUNG SIDEROSIS.CHRONIC OVEREXPOUSURE TO SILICON DUST CAN CAUSE CHRONIC BRONCHITIS.

THIS PRODUCT ALSO CONTAINS LEAD AND CHROMIUM COMPOUNDS.LEAD IS KNOWN TO CAUSE REPRODUCTIVE TOXICITY AND IS A KNOWN CARCINOGEN.EXPOSURE TO CHROMIUM DUST OR FUME MAY CAUSE METAL FUME FEVER WITH FLU-LIKE SYMPTOMS AND KIDNEY AND KIDNEY AND LIVER DAMAGE.UNDER HIGH TEMPERATURES,HEXAVALENT CHROMIUM MAY BE PRODUCED,IF INTHE INSOLUBLE FORM,IT IS A CONFIRMED HUMAN CARCINOGEN. (CALIFORNIA PROPOSITION 65). IF COATED WITH OIL,MAY CAUSE SKIN IRRITATION/DERMATITIS BY CONTACT. WELDING FUME IS LISTED AS A POSSIBLE CARCINOGENIC TO HUMANS.READ THE ALUMINUM/ALUMINUM ALLOYS MATERIAL SAFETY DATA SHEET(MSDS) ON FILE WITH YOUR EMPLOYER BEFORE WORKING WITH THIS MATERIAL.

*** If processing or recycling produces particulate,use exhaust ventilation or other controls designed to prevent exposure to workers. Examples of such activities include melting, welding,grinding,abrasive sawing,sanding and polishing.Any activity which abrades the surface of this material can generate airborne particulate.Use appropriate NIOSH approved respiratory protection (P95; P100 for lead with, quantitative fit testing required) if exposures exceed the permissible limits.**
*** The Occupational Safety and Health Administration (OSHA) have set mandatory limits on occupational exposures.**
*** Aluminum, in solid form and as contained in finished products presents no special health risk.**
*** Sold for manufacturing purposes only.This product can be recycled; contact your sales representative.**

The Occupational Safety and Health Administration require employers to provide training in the proper use of this product.

For additional information, call or write to Copper and Brass Sales,22355 West Eleven Mile Road, Southfield, MI 48033,telephone248-233-5600, or visit our web site @ www.copperandbrass.com.

Sierra Aluminum Company
2345 Fleetwood Drive, Riverside, CA 92509
(951) 781-7800 Fax (951) 781-7864

MATERIAL CERTIFICATION

Certification No.: 148357-2/1A **Stencil/Lot No.:** 145540-4/1A **Date:** 12/8/2010

Sold To:	**Shipped To:**
COPPER & BRASS SALES P.O. BOX 5116 SOUTHFIELD, MI 48086	COPPER & BRASS SALES > 5441 NE 148TH AVE STE 106 PORTLAND, OR 97230

P.O. No.	Sales Order-Item	Part No.	Description	Die No.
5400087302-R05	148357-2/1A	ALREC00750	1X4 RecBar	250538

Material Specification	Testing Method	Alloy-Temper
ASTM B221-08, AMS-QQ-A-200/8, ASME-SB-221	ASTM B557-06	6061-T6511

CHEMICAL PROPERTIES FOR 6061 ALLOY

	SI	FE	CU	MN	MG	CR	ZN	TI	Other Elements each	Other Elements total	AL
Minimum	.40	---	.15	---	.80	.04	---	---	---	---	Rem.
Maximum	.80	.70	.40	.15	1.20	.35	.25	.15	.05	.15	

MECHANICAL PROPERTIES

Cast No.	No. of Tests *	Strength psi				Elong % in 2" or 4D	
		Yield **		Tensile			
		Min.	Max.	Min.	Max.	Min.	Max.
100830-04	1	47517	47517	50586	50586	16	16
Requirements		35000		38000		10	

EQUIPMENT	Tensile	Extensometer	Spectrometer
MODEL	SATEC33EMF	T1M-2501	ARL3560-907
CALIBRATED ON	9/14/2010	9/14/2010	10/25/2010
DUE ON	3/14/2011	3/14/2011	4/25/2011

We hereby certify that the aluminum extrusion covered by this report has been inspected and tested in accordance with our standard sampling plan or the requirements of any specifications of the material described in this report. The material has been found to meet the applicable requirements described herein. The samples, representative of the material, met the composition limits and had the mechanical properties shown. Also, note that Mercury is not a normal contaminant in aluminum alloys. Neither Mercury nor any of its compounds are used in the manufacture of our extrusions. Melted and manufactured in Fontana/Riverside, California U.S.A.

Authorized Signature Mitchell A. Coe

Mitchell A. Coe, Quality Service Representative

*When 2 or more tests are made, the highest and lowest values are reported.
**Yield strength is determined by the 0.2% offset method.

QC-F-002 REV,NC 6/17/2009

61stock

ThyssenKrupp Materials NA
Copper and Brass Sales Division

ThyssenKrupp

ORDER CONFIRMATION

ThyssenKrupp Materials NA, 19044 95A Avenue, Surrey, BC, V4N 4P2

AERO DESIGN LTD.
2013 39 AVE NE
CALGARY AB T2E 6R7
Canada

TEL: 403-250-8027
FAX: 403-250-8333

DATE:	02/15/2011
ORDER NO:	**1400729922 ***
YOUR P/O:	11022 dtd.
ATTENTION TO:	Steven Fahey
TEL:	403-250-8027
CUSTOMER NO:	10016771
DEPARTMENT:	CAN VAN INS 01
CONTACT:	Travis Wilson
TEL:	604-881-4009
FAX:	604-882-0686
EMAIL:	Travis.Wilson@thyssenkrupp.com

* please state on all documents

We thank you for your order which we confirm as follows:

Delivery Address
AERO DESIGN LTD., 2013 39 AVE NE, CALGARY, AB T2E 6R7, CANADA
Unloading Point: Unload Point 1

Earliest Delivery Date: **02/23/2011**

ITEM	DESCRIPTION	QTY1 UOM QTY2 UOM QTY3 UOM	PRICE CUR PER UOP	TOTAL CAD
0010	ALREC00750 6061 - T6511 Aluminum Extruded Rectangular 1.00000 (+-.012) X 4.0000 (+-.034) X 144 Mill Length ASTM B 221|2008 ROHS COMPLIANT SAE AMS-QQ-A-200/8|1997 Nominal Chemistry/Act Physical Standard Packaging Order Number: 11022	**48 FT** **225.792 LB**	**11.76 CAD** **1 FT**	**564.48**
	Fuel/Energy Surchrg			7.42
	Item total:			**571.90**
0020	ALREC00023 6061 - T6511 Aluminum Extruded Rectangular 1.00000 (+-.012) X 6.0000 (+-.044) X 144 Mill Length ASTM B 221|2008 ROHS COMPLIANT SAE AMS-QQ-A-200/8|1997 Nominal Chemistry/Act Physical Standard Packaging Order Number: 11022	**24 FT** **169.344 LB**	**17.64 CAD** **1 FT**	**423.36**
	Fuel/Energy Surchrg			7.42
	Item total:			**430.78**

ThyssenKrupp Materials NA
Copper and Brass Sales Division

ThyssenKrupp

ThyssenKrupp Materials NA, 19044 95A Avenue, Surrey, BC, V4N 4P2

AERO DESIGN LTD.
2013 39 AVE NE
CALGARY AB T2E 6R7
Canada

ORDER CONFIRMATION

DATE: 02/15/2011
ORDER NO: 1400729922 *
YOUR P/O: 11022 dtd.
ATTENTION TO: Steven Fahey
TEL: 403-250-8027
* please state on all documents

Weight total	395.136 LB	
Items total		1,002.68
Net Amount		**1,002.68**
GST		50.13
TOTAL		**1,052.81**

Payment Terms: Within 30 days without deduction
Delivery Terms: PPD Prepaid Best Way
Shipping Condition: General Delivery

Please review the above items for accuracy.
Prices are quoted as price in effect at time of shipment.
Our standard terms and conditions apply should this quote become an order.
For terms and conditions please refer to website at **www.copperandbrass.com**
Any obvious damage must be noted on the material delivery documentation at the time of receipt.
Tax exemption status documentation must be forwarded to credit department prior to order approval.
All returned material subject to restock charge

Copper and Brass Sales
22355 W 11 Mile Road
Southfield, MI 48033

ThyssenKrupp Materials NA
Copper and Brass Sales Division

ThyssenKrupp

QUOTE

ThyssenKrupp Materials NA, 19044 95A Avenue, Surrey, BC, V4N 4P2

AERO DESIGN LTD.
2013 39 AVE NE
CALGARY AB T2E 6R7
Canada

TEL: 403-250-8027
FAX: 403-250-8333

DATE: 02/15/2011
QUOTE NO: 1200279384
YOUR INQUIRY:
ATTENTION TO: Steven Fahey
TEL: 403-250-8027
CUSTOMER NO: 10016771
DEPARTMENT: CAN VAN INS 01
CONTACT: Travis Wilson
TEL: 604-881-4009
FAX: 604-882-0686
EMAIL: Travis.Wilson@thyssenkrupp.com

PO 11022

Thank you for allowing us to quote on your requirement. Delivery contingent upon date ordered.

Delivery Address
AERO DESIGN LTD., 2013 39 AVE NE, CALGARY, AB T2E 6R7, CANADA
Unloading Point: Unload Point 1

Delivery Time: **3-4 d.after.rec.orde**

ITEM	DESCRIPTION	QTY1 UOM QTY2 UOM QTY3 UOM	PRICE CUR PER UOP	TOTAL CAD
0010	ALREC00750 6061 - T6511 Aluminum Extruded Rectangular 1.00000 (+-.012) X 4.0000 (+-.034) X 144 Mill Length ASTM B 221|2008 ROHS COMPLIANT SAE AMS-QQ-A-200/8|1997 Nominal Chemistry/Act Physical Standard Packaging	**48 FT** **225.792 LB**	**11.76 CAD** **1 FT**	**564.48**
	Fuel/Energy Surchrg			7.42
	Item total:			**571.90**
0020	ALREC00023 6061 - T6511 Aluminum Extruded Rectangular 1.00000 (+-.012) X 6.0000 (+-.044) X 144 Mill Length ASTM B 221|2008 ROHS COMPLIANT SAE AMS-QQ-A-200/8|1997 Nominal Chemistry/Act Physical Standard Packaging	**24 FT** **169.344 LB**	**17.64 CAD** **1 FT**	**423.36**
	Fuel/Energy Surchrg			7.42
	Item total:			**430.78**

Copper and Brass Sales
22355 W 11 Mile Road
Southfield, MI 48033

ThyssenKrupp Materials NA
Copper and Brass Sales Division

ThyssenKrupp

ThyssenKrupp Materials NA, 19044 95A Avenue, Surrey, BC, V4N 4P2

AERO DESIGN LTD.
2013 39 AVE NE
CALGARY AB T2E 6R7
Canada

QUOTE

DATE: 02/15/2011
QUOTE NO: 1200279384
YOUR INQUIRY:
ATTENTION TO: Steven Fahey
TEL: 403-250-8027

Weight total	395.136 LB	
Items total		1,002.68
Net Amount		**1,002.68**
GST		50.14
TOTAL		**1,052.82**

Payment Terms: Within 30 days without deduction
Delivery Terms: PPD Prepaid Best Way
Shipping Condition: General Delivery

COMPUTER GENERATED OFFER AND VALID WITHOUT SIGNATURE.

Please review the above items for accuracy.
Prices are quoted as price in effect at time of shipment.
Our standard terms and conditions apply should this quote become an order.
For terms and conditions please refer to website at **www.copperandbrass.com**
Any obvious damage must be noted on the material delivery documentation at the time of receipt.
Tax exemption status documentation must be forwarded to credit department prior to order approval.
All returned material subject to restock charge

Copper and Brass Sales
22355 W 11 Mile Road
Southfield, MI 48033

AERO Design Ltd.
2013 - 39th Avenue N.E.
Calgary, Alberta, T2E 6R7
Phone: (403) 250-8027
Fax: (403) 250-8333

Purchase Order

P.O. Number	**11021**
Date	10-Feb-11

Vendor:	
Name:	API
Address:	Suite 5 575 Palmer Road N.E. Calgary, Alberta T2E 7G4
Phone:	403-250-9383
Fax:	403-250-8186
Attention:	0
Currency:	CAD

Ship To:	
Name:	AERO Design Ltd.
Address:	2013 - 39th Avenue N.E. Calgary, Alberta, T2E 6R7
Phone:	(403) 250-8027
Fax:	(403) 250-8333
Attention:	Jeff Clarke

ITEM	DESCRIPTION	QTY	RATE	AMOUNT
1	AN3-5A Bolt (25 pkg)	4	16.85	67.40
		Subtotal		67.40
	Sales Tax	GST	5.00%	3.37
		Total	**CAD**	**$70.77**

API
AEROSPACE PRODUCTS INTERNATIONAL

API
#550 - 575 Palmer Road N.E.
CALGARY AB T2E 7G4
CANADA

02/14/2011 13:38:01

Pack List

Shipping Address
AERO DESIGN LTD
2013 39 AVE NE
CALGARY AB T2E 6R7
CANADA

Forwarding Agent's Address

Shipping Instructions
Detailed Shipping Instructions at the end of the document

Packing Instructions
Detailed Packing Instructions at the end of the document

Information

Document Number	80843973
Document Date	02/14/2011
Purchase Order No.	11021
Purchase Order Date	02/10/2011
Sales Order Number	750487
Sales Order Date	02/10/2011
Customer Number	5101060
Shipping Conditions	Will Call
Incoterms	
Cust Ship Acct	
Delivery Date	02/14/2011
Bill of Lading	
Total Volume	2.200 IN3
Carrier	PICK UP BY CUSTOMER

Item	Material	Material Description	Quantity	Weight	Batch Num
10	AN3-5A	BOLT (PKG 25)			
	Batches				
	0001652541 (PO:4500137792)		4 PAC	0 LB	

Shipping and Packing Instructions

CERTIFICATE OF CONFORMANCE

I hereby certify that th eaircraft parts described hereon were acquired from a source of supply that is consistent with the conditions under which Transport Canada distributor approval number 77-98 has been granted.

Authorized Signature _____ AO # 77-98 API # 11

Return Policies

Warranty Information

The manufacturer warrants most products sold by API. In addition, API will gladly process warranty claims for products originally purchased through API. API offers no additional warranty beyond that of the manufacturer. Many manufacturers include warranty information in their packaging. Please feel free to contact an API Quality Service Representative concerning warranty information or to obtain the RMA (Return Materials Authorization) needed to file a warranty claim. To speak with an API Quality Service Representative dial 888-API-24X7 (888-274-2497). RMAs are valid for 30 days from date issued.

A warranty claim form and an RMA must accompany all products returned for warranty. Without this documentation API will not be able to assist you in filing your claim. Manufacturer warranty claim forms are available at WWW.APIWORLDWIDE.COM.

Please be advised that some manufacturers honor warranties by remanufacturing the part rather than issuing credit. API will return the remanufactured part to the customer.

Returns Made Easy

API accepts most returns that were purchased from our stock within 30 days of invoke. Just call an API Quality Service Representative at 888-API-24X7 (888-274-2497) to obtain the necessary RMA (Return Materials Authorization) number. By simply including the API RMA with your return, the time needed to issue credit is minimized. Nobody enjoys having to return parts. API understands this and makes it as trouble-free as possible. Remember, all returned items must be in their original packaging, must be in new, uninstalled condition and include all original documentation. A restocking fee of 15%, with a minimum of $25.00, will be assessed on all stocked items except those due to an error on API's part. RMAs are valid for 30 days from the date of issue.

No returns will be accepted 30 days from the date of invoice. Please remember that Electrical Components, Shelf-Life Limited, Non-Stock items, Drop-ship Items and Special Orders are non-returnable. Once the RMA expires the return can no longer be accepted by API and will be returned at the customer's expense.

Quick Core Credit

When ordering exchange items, the API system will automatically assign the necessary RMA (Return Materials Authorization) number to return your core. The API CSR will supply you with any additional details needed to return your core. All cores are subject to final inspection and acceptance from the vendor or manufacturer. Unless prior written authorization is obtained from API, all cores must be "like part numbers" and must be in serviceable condition. Otherwise, API will pass on any fees assessed by our manufacturer for substandard or unlike cores.

The API RMA system will print a Core Letter, which includes the customer's name and the API delivery number in which the exchange was purchased. The Core Letter must accompany all core returns. This RMA is valid for 60 days from date of invoice. Please ask your API Quality Service Representative for the return due date of your particular core. Once the RMA expires the core can no longer be accepted by API and will be returned at the customer's expense. *In the event your Return Core Letter is misplaced, contact the API Quality Service Representative to obtain a replacement.*

We appreciate your business and reaffirm our commitment to provide the most responsive customer service, as well as the highest quality compliant products, at competitive prices.

API
AEROSPACE PRODUCTS INTERNATIONAL

API
#550 - 575 Palmer Road N.E.
CALGARY AB T2E 7G4
CANADA
Phone: 403-250-9383
Fax: 403-250-8186
GST # 143526788RT

PRICING LIST

NUMBER	DATE
80843973	02/14/2011

PLEASE REMIT TO:
PO Box
Calgary AB T2P 2H6
REFER TO INVOICE NUMBER WHEN REMITTING

5101060

BILL TO AERO DESIGN LTD
2013 39 AVE NE
CALGARY AB T2E 6R7
CANADA

5101060

SHIP TO AERO DESIGN LTD
2013 39 AVE NE
CALGARY AB T2E 6R7
CANADA

Phone No: 403-250-8027

CUSTOMER PURCHASE ORDER NO.	ORDER NO. / DELIVERY NO.
11021	750487 - 80843973

SHIPPED VIA	DELIVERING PLANT	CARTONS
	API - Calgary	1

QUANTITY ORDERED	QUANTITY SHIPPED	DESCRIPTION MATERIAL	U/M	LIST PRICE	UNIT PRICE	EXTENDED PRICE
4		BOLT (PKG 25) AN3-5A	PA	37.44	16.85	67.40
		Item Total				67.40
		Canadian GST				3.37

TOTAL CAD 70.77

Return Policies

Warranty Information

The manufacturer warrants most products sold by API. In addition, API will gladly process warranty claims for products originally purchased through API. API offers no additional warranty beyond that of the manufacturer. Many manufacturers include warranty information in their packaging. Please feel free to contact an API Quality Service Representative concerning warranty information or to obtain the RMA (Return Materials Authorization) needed to file a warranty claim. To speak with an API Quality Service Representative dial 888-API-24X7 (888-274-2497). RMAs are valid for 30 days from date issued.

A warranty claim form and an RMA must accompany all products returned for warranty. Without this documentation API will not be able to assist you in filing your claim. Manufacturer warranty claim forms are available at WWW.APIWORLDWIDE.COM.

Please be advised that some manufacturers honor warranties by remanufacturing the part rather than issuing credit. API will return the remanufactured part to the customer.

Returns Made Easy

API accepts most returns that were purchased from our stock within 30 days of invoke. Just call an API Quality Service Representative at 888-API-24X7 (888-274-2497) to obtain the necessary RMA (Return Materials Authorization) number. By simply including the API RMA with your return, the time needed to issue credit is minimized. Nobody enjoys having to return parts. API understands this and makes it as trouble-free as possible. Remember, all returned items must be in their original packaging, must be in new, uninstalled condition and include all original documentation. A restocking fee of 15%, with a minimum of $25.00, will be assessed on all stocked items except those due to an error on API's part. RMAs are valid for 30 days from the date of issue.

No returns will be accepted 30 days from the date of invoice. Please remember that Electrical Components, Shelf-Life Limited, Non-Stock items, Drop-ship Items and Special Orders are non-returnable. Once the RMA expires the return can no longer be accepted by API and will be returned at the customer's expense.

Quick Core Credit

When ordering exchange items, the API system will automatically assign the necessary RMA (Return Materials Authorization) number to return your core. The API CSR will supply you with any additional details needed to return your core. All cores are subject to final inspection and acceptance from the vendor or manufacturer. Unless prior written authorization is obtained from API, all cores must be "like part numbers" and must be in serviceable condition. Otherwise, API will pass on any fees assessed by our manufacturer for substandard or unlike cores.

The API RMA system will print a Core Letter, which includes the customer's name and the API delivery number in which the exchange was purchased. The Core Letter must accompany all core returns. This RMA is valid for 60 days from date of invoice. Please ask your API Quality Service Representative for the return due date of your particular core. Once the RMA expires the core can no longer be accepted by API and will be returned at the customer's expense. *In the event your Return Core Letter is misplaced, contact the API Quality Service Representative to obtain a replacement.*

We appreciate your business and reaffirm our commitment to provide the most responsive customer service, as well as the highest quality compliant products, at competitive prices.

API WANT LIST

Company _____ Order Date _____

Contact Name _____ Date Needed _____

Address _____ P.O. # _____

_____ Work Order # _____

Phone _____ Ship Via _____

ORDER UNTIL MIDNIGHT EST FOR SAME DAY SHIPPING • FAX ORDERS TO 800-950-1411

QUANTITY	PART NUMBER	DESCRIPTION
100	AN3-5A	Pkg 25 4/16/85 PO 11021
		Monday called. Thurs

Additional instructions _____

_____

API
AEROSPACE PRODUCTS
INTERNATIONAL

API Asia Pacific
Philippines
63.45.599.5490 Tel
63.45.599.5464 Fax
PhilSales@apiworldwide.com

API China
Shanghai (Pudong)
86.21.5866.8660 Tel
86.21.5866.8366 Fax
ChinaSales@apiworldwide.com

API Canada
Calgary
888.322.8281 Tel
888.322.8285 Fax
CalgarySales@apiworldwide.com

Montreal
800.214.7404 Tel
800.214.8875 Fax
MontrealSales@apiworldwide.com

API USA
Memphis
888.API.24X7 Tel
800.950.1411 Fax
24X7@apiworldwide.com

AERO Design Ltd.
2013 - 39th Avenue N.E.
Calgary, Alberta, T2E 6R7
Phone: (403) 250-8027
Fax: (403) 250-8333

Purchase Order

P.O. Number	**11020**
Date	15-Mar-11

FAXED

Vendor:	
Name:	Avio-Diepen
Address:	Suite 500, 561 Airport South Parkway Atlanta, GA 30349 USA
Phone:	(770) 996-6430
Fax:	(770) 996-8430
Attention:	Eric Jackson
Currency:	USD

Ship To:	
Name:	AERO Design Ltd.
Address:	2013 - 39th Avenue N.E. Calgary, Alberta, T2E 6R7
Phone:	(403) 250-8027
Fax:	(403) 250-8333
Attention:	Steve Fahey

ITEM	DESCRIPTION	QTY	RATE	AMOUNT
1	40191-10 Base Fitting Stud	4	40.49	161.96
2	40191-11 Base Fitting Stud	6	34.52	207.12
3	40351-10 Base Fitting Stud	4	24.99	99.96
	Please ship together (as one order)			
	Please ship via UPS (account # 1016Y4) Regular service			
	Reference your quote, February 25, 2011 (number 02252011)			
		Subtotal		469.04
				0.00
		Total	**USD**	**$469.04**

AVIO-DIEPEN INC.
561 AIRPORT SOUTH PARKWAY,SUITE 500
ATLANTA, GEORGIA 30349
UNITED STATES
FAX : +1-770-996-8430
SITA: HAGME7X

ORDER CONFIRMATION

Number : 405752 Page 1 of 1
Date : 16 MAR 2011
Contact: Eric Jackson
Phone : +1-770-996-6430

-Ship to-
AERO DESIGN LTD
2013-39TH AVENUE NE
CALGARY ALBERTA T2E 6R7
CANADA

-Sold to-
AERO DESIGN LTD
2013-39TH AVENUE NE
CALGARY ALBERTA T2E 6R7
CANADA

-Marks-
AERO DESIGN LTD
2013-39TH AVENUE NE
CALGARY ALBERTA T2E 6R7
CANADA

Attn : JEFF CLARKE
Fax : +1-403-250-8333
Your Ref : 11020

Payment : VISA/MASTERCARD
Currency : U.S. DOLLAR

Transport: UPS GROUND TRACKING
Prices : EX WORKS ATLANTA
Delivery : EX WORKS ATLANTA

Condition: FACTORY NEW CERTIFIED

Certificates: C.O.C. (ISSUED BY AVIO-DIEPEN)
C.O.C. (ISSUED BY MANUFACTURER)

It.	Partno and description	Quantity	Unit	Unit price	Disc	ShipDate
001	40191-10 BASE FITTING YOUR ITEM: 1	4.0	EACH	40.49	0.0	16-MAR-2011
002	40191-11 BASE FITTING YOUR ITEM: 2	6.0	EACH	34.52	0.0	16-MAR-2011
003	40351-10 THREADED STUD YOUR ITEM: 3	4.0	EACH	24.99	0.0	16-MAR-2011

THANK YOU FOR YOUR ORDER
UPS GROUND ACCT #1016Y4
ELJ

Dear Sirs,

We thank you for the above mentioned order and confirm the above items in accordance with our Conditions of Sale.

The delivery conditions refer to the Incoterms 2000.

-Authentication-

Deon Galatas

Eric Jackson

AVIO-DIEPEN INC.
561 AIRPORT SOUTH PARKWAY, SUITE 500
ATLANTA, GEORGIA 30349
UNITED STATES
FAX : +1-770-996-8430
SITA: HAGME7X

EXPORT INVOICE

Number : 489903
Date : 2011-03-16
Contact: Eric Jackson
Phone : +1-770-996-6430

-Consignee-
AERO DESIGN LTD
2013-39TH AVENUE NE
CALGARY ALBERTA T2E 6R7
CANADA 1

-Sold to-
AERO DESIGN LTD
2013-39TH AVENUE NE
CALGARY ALBERTA T2E 6R7
CANADA

It.	Partno and description	Quantity	Unit	Unit-price	Disc%	Amount
003	40351-10 THREADED STUD 73181900 YOUR ITEM: 3 COUNTRY OF ORIGIN: UNITED STATES ECCN CODE: EAR99 SCHEDULE B: 8803300030	4.0	EACH	24.99	0.0	99.96
					USD	469.04

avio-diepen

AVIO-DIEPEN INC.
561 AIRPORT SOUTH PARKWAY, SUITE 500
ATLANTA, GEORGIA 30349
UNITED STATES
FAX : +1-770-996-8430
SITA: HAGME7X

EXPORT INVOICE

Number : 489903
Date : 2011-03-16
Contact: Eric Jackson
Phone : +1-770-996-6430

-Consignee-
AERO DESIGN LTD
2013-39TH AVENUE NE
CALGARY ALBERTA T2E 6R7
CANADA 1

-Sold to-
AERO DESIGN LTD
2013-39TH AVENUE NE
CALGARY ALBERTA T2E 6R7
CANADA

-Ship to-
AERO DESIGN LTD
2013-39TH AVENUE NE
CALGARY ALBERTA T2E 6R7
CANADA

Attn : JEFF CLARKE
Your Ref : 11020

Your VATNO :
Our VATno : -
Our orderno : 405752/AER736

Prices : EX WORKS ATLANTA
Delivery : EX WORKS ATLANTA
Customs : Free -
Transport : UPS GROUND TRACKING
Account no : 1016Y4

Criticality : Normal

It.	Partno and description	Quantity	Unit	Unit-price	Disc%	Amount
001	40191-10 BASE FITTING 73181900 YOUR ITEM: 1 COUNTRY OF ORIGIN: UNITED STATES ECCN CODE: EAR99 SCHEDULE B: 8803300030	4.0	EACH	40.49	0.0	161.96
002	40191-11 BASE FITTING 73182900 YOUR ITEM: 2 COUNTRY OF ORIGIN: UNITED STATES ECCN CODE: EAR99 SCHEDULE B: 8803300030	6.0	EACH	34.52	0.0	207.12

APPLICABLE TO GOODS SUBJECT TO THE EAR
These commodities, technology or software were exported from the U.S.A. in accordance with the Export Administration Regulations (EAR).
Diversion contrary to U.S. law is prohibited.

This export invoice is issued for transportation and customs purposes only.
DO NOT PAY ON THIS INVOICE
Original invoice will follow.

CANADA CUSTOMS INVOICE
FACTURE DES DOUANES CANADIENNES

1. EXPORTER/SHIPPER:
AVIO-DIEPEN INC.
561 AIRPORT SOUTH PARKWAY
ATLANTA GA. 30349

2. DATE OF DIRECT SHIPMENT TO CANADA / DATE D,EXPEDITION DIRECTE VERS LE CANADA:

3. P.O NO. / NBRE DE COMMANDE DE L'ACHETEUR (AUTRES REFERENCE S'IL Y A LIEU):

4. CURRENCY OF SETTLEMENT / DEVISES DU PALEMENT:
U.S. DOLLARS

CONSIGNEE:
AERO DESIGN LTD
2013-39TH AVENUE NE
CALGARY ALBERTA T2E 6R7
CANADA

6. PURCHASER'S NAME AND ADDRESS (IF OTHER THAN CONSIGNEE)
NOM ET ADRESSE DE L'ACHELEUR (S'ILDIFFERE DU DESTINATAIRE

7. CANADIAN CUSTOMS BROKER (NAME AND ADRESS):
AGENT CANADIAN EN DOUANE (NOM ET ADRESSE):

8. CANADIAN CUSTOMS CLEARANCE LOCATION (INSTALLATION DE DEDOUANEMENT):

9. COUNTRY OF TRANSSHIPMENT (PAYS DE TRANSBORDEMENT):

10. COUNTRY OF ORIGIN (PAYS D'ORIGINE DES MARCHANDISES):
UNITED STATES

IF THE SHIPMENT INCLUDES GOODS OF DIFFERENT ORIGINS ENTER ORIGINS AGAINST ITEMS IN FIELD 12./ SI L'EXPEDITION COMPREND DES MARCHANDISES D'ORIGINES DIFFERENTES PRECISER LEUR PROVENANCE EN ZONE 12.

11. TRANSPORTATION: GIVE MODE AND PLACE OF DIRECT SHIPMENT TO CANADA/ TRANSPORT: PRECISER MODE ET POINT D'EXPEDTION DIRECTE VERS LE CANADA:

12. CONDITIONS OF SALE AND TERMS OF PAYMENT
CONDITIONS DE VENTE ET MODALITES DE PAIEMENT:

13. NO. OF PKGS. ---------- NBRE DE COILS	14. SPECIFICATION OF COMMODITIES (KIND OF PACKAGES, MARKS AND NUMBERS, GENERAL DESCRIPTION AND CHARACTERISTICS, IE. GRADE, QUALITY) / DESIGNATION DES ARTICLES (NATURE DES COLIS, MARQUES ET NUMEROS, DESCRIPTION GENERAL ET CARACTERISTIQUES,P. EX. CLASSE, QUALITE):	15. QUANTITY (STATE UNIT) ---------- QUANTITE (PRECISER-l'UNITE)	16. SHIPPING WEIGHT (LBS.) ---------- POIDS D'EXPEDITION (LIVRES)	17. UNIT PRICE ---------- PRIX UNITAIRE	18. TOTAL
	40191-10 BASE FITTING	4		40.49	161.96
	40191-11 BASE FITTING	6		34.52	207.12
	40351-10 THREADED STUD	4		24.99	24.99
					469.04

21. IF ANY FIELDS 1 TO 20 ARE INCLUDED ON AN ATTACHED COMMERCIAL INVOICE, CHECK THIS_____
SI TOUTE RESEIGNEMENT AUX ZONES 1 A 20 FIGURE SUR UNE OU DES FACTURES COMMERCIALES CI-ATTACHEES, COCHER CETTE CASE
COMMERCIAL INVOICE NO. / N DE LA FACTURE COMMERCIALE-_____YES_____

NET	GROSS / BRUT

22. VENDOR / SELLER (IF OTHER THAN EXPORTER):

23. ORIGINATOR (NAME AND ADDRESS) / EXPEDITEUR D' ORIGINE:

24. DEPARTMENTAL RULING (IF APPLICABLE) / DECISION DU MINISTERE (S'IL Y A LIEU):

25. IF FIELDS 26 TO 28 ARE NOT APPLICABLE, CHECK THIS BOX_____
SI LES ZONES 26 A 28 SONT SANS OBJET, COCHER CETTE CASE

26. IF INCLUDED IN FIELD 20 INDICATE AMOUNT: (SI COMPRIS DANS LE TOTAL A LA ZONE 20, PRECISER)	27. IF NOT INCLUDED IN FIELD 20 INDICATE AMOUNT: (SI NON COMPRIS DANS LE TOTAL A LA ZONE 20, PRECISER):	28. CHECK (IF APPLICABLE): COCHER (S'IL Y A LIEU):
(i) TRANSPORTATION CHARGES, EXPENSE AND INSURANCE FROM THE PLACE OF DIRECT SHIPMENT TO CANADA. LES TRAIS DE TRNSPORT, DEPENSES ET ASSURANCES A PARTIR DU POINT D'EXPEDITION DIRECTE VERS LE CANADA _____ (ii) COSTS FOR CONSTRUCTION, ERECTION AND ASSEMBLY INCURRED AFTER IMPORTATION INTO CANADA. LES COUTS DE CONSTRUCTION, D'ERECTION ET D'ASSEMBLAGE APRES IMPORTATION AU CANADA. _____ (iii) EXPORT PACKING. (LE COUT DE L'EMBALLAGE D'EXPORTATION). _____	(i) TRANSPORTATION CHARGES, EXPENSE AND INSURANCE TO THE PLACE OF DIECT SHIPMENT TO CANADA. LES FRAISDE TRANSPORT, DEPENSES ET ASSURANCES JUSQU AU POINT D'EXPEDITION DIRECT VERE LE CANADA _____ (ii) AMOUNTS FOR COMMISSIONS OTHER THAN BUYING COMMISSIONS. LES COMMISSIONS AUYTRES QUE CELLES VERSEES PUOR L'ACHAT. _____ (iii) EXPORT PACKING. (LE COUT L'EMBALLAGE D'EXPORTATION). _____	____ (i) ROYALTY PAYMENTS OR SUBSEQUENT PROCEEDS ARE PAID OR PAYABLE BY THE PURCHASER. (DES REDEVANCES OU PRODUIT ONT ETE OU SERONT VERSES PAR L'ACHETEUR). ____ (ii) THE PURCHASER HAS SUPPLIED GOODS OR SERVICES FOR USE IN THE PRODUCTION OF THESE GOODS. (L'ACHETEUR A FOURNI DES MARCHANDISES OU DES SERVICES DES MARCHANDISES).

ANCRA INTERNATIONAL LLC
4880 West Rosecrans Avenue
Hawthorne, California 90250
Phone: (310) 973-5000 • FAX: (310) 973-1138

Shipping List Number 691956-6

Customer Order		Order Date	Page
30062399		06-11-10	1

Ship To: 100706
AVIO-DIEPEN INC.
561 Airport South Parkway
Suite#500
Atlanta, GA 30349

Bill To: 100706
AVIO-DIEPEN INC.
561 Airport South Parkway
Suite#500
Atlanta, GA 30349

Ship Via: FedEx Ground Contact : RAY HALL
Ship from: W ANCRA WEST HAWTHORNE Freight Terms : COL
Ord.Ent.By: gvillalobos

Ln No	Item Number	Description	Sell UM	Sell Qty Ship	To Stk UM	Bin Loc	Stock Qty To Ship	Shipped Qty/UM
8	40191-10		EA	500	EA	B-45	8	8
	Facility W :FITTING BASE ATTACHMENT							
	Rev. Level: BC					STOCK	492	492

** Special Instructions **
****
****
FEDEX GRD ACCT# 148379939
*** CRITICAL- [AVIO DIEPEN PO# NUMBER MUST BE ON
FREIGHT COMPANY BILL OF LADING.//DO NOT INSURE**
****
****
**CRITICAL-[ALL HEAT LOT #S MUST ME ON C of C FOR
ALL
SEAT TRACK**
****
****
FAA FORM 8130-3 AIRWORTHINESS APPROVAL REQUIRED
FOR PN 45387-10, 40191-10, AND 40340-20

Allocated: 09-09-10
Printed: 09-09-10 08:53:33

ORM CS-7 REV. N/C

ANCRA INTERNATIONAL LLC
4880 West Rosecrans Avenue
Hawthorne, California 90250
Phone: (310) 973-5000 • FAX: (310) 973-1138

Shipping List Number691956-6

Customer Order		Order Date	Page
30062399		06-11-10	2

Ship To: 100706
AVIO-DIEPEN INC.
561 Airport South Parkway
Suite#500
Atlanta, GA 30349

Bill To: 100706
AVIO-DIEPEN INC.
561 Airport South Parkway
Suite#500
Atlanta, GA 30349

Ship Via: FedEx Ground Contact : RAY HALL
Ship from: W ANCRA WEST HAWTHORNE Freight Terms : COL
Ord Ent By: gvillalobos

Ln No	Item Number	Description	Sell UM	Sell Qty ....Ship...	To Stk UM	Bin Loc	Stock Qty To Ship	Shipped Qty/UM

CERTIFICATE OF CONFORMANCE

WE HEREBY CERTIFY THAT THE ABOVE STATED PART NUMBERS REPRESENTED ARE NEW AND HAVE BEEN MANUFACTURED AND INSPECTED IN ACCORDANCE WITH OUR QUALITY ASSURANCE MANUAL, ALL RELEVANT DRAWINGS, SPECIFICATIONS, PURCHASE ORDER REQUIREMENTS, AND LEGIBLY MARKED IN ACCORDANCE WITH FAR 45.15, IF APPLICABLE.

AS SUCH, THESE PRODUCTS CONFORM TO CURRENT APPLICABLE AIRWORTHINESS REGULATIONS. ALL CHEMICAL, PHYSICAL OR FUNCTIONAL TEST REPORTS RELEVANT TO THE CERTIFICATION OF CONFORMANCE ARE ON FILE IN OUR QUALITY ASSURANCE OFFICE.

INSPECTOR Juan Laguna DATE 9/9/2010

Shortage Claim Policy

Ancra customer is responsible for inspecting incoming shipments. Ancra must be notified within fifteen(15) days of receipt of shipment if material is not as ordered, quantity is either surplus or short, or if any damage has occurred in shipment. No claims submitted to Ancra will be accepted after fifteen(15) days of receipt.

Pay Terms NET 30

FORM CS-7 REV. N/C

1. Approving National Aviation Authority / Country	2.	3. Form Tracking Number:
FAA / United States	**AUTHORIZED RELEASE CERTIFICATE** *FAA Form 8130-3, AIRWORTHINESS APPROVAL TAG*	691956-6

4. Organization Name and Address: ANCRA INTERNATIONAL LLC
4880 WEST ROSECRANS AVENUE
HAWTHORNE CA 90250
PRODUCTION CERTIFICATE No. (721NM)

5. Work Order,Contract,or Invoice Number: 30062399

6. Item	7. Description	8. Part Number	9 Eligibility *	10. Quantity	11. Serial/Batch Number	12. Status/Work
1	FITTING ASSY.	40191-10	N/A	500	N/A	NEW

13. Remarks

Airworthiness Approval

This part is a subcomponent of an FAA approved assembly.

AVIO-DIEPEN INC.

14. Certifies the items identified above were manufactured in conformity to :

[X] Approved design data and are in a condition for safe operation

[ ] Non-approved design data specified in block 13

19. [ ] 14 CFR 43.9 Return to Service [ ] Other regulation specified in Block 13

Certifies that unless specified inBlock 13, the work identified in Block12 and described in Block13 was accomplished in accordance with Title 14 Code of Federal Regulations, part 43 and in respect to that work, the items are approved for return to service.

15. Authorized Signature: Juan Lagunas	16. Approval/ Authorization No: DMIR-660010-NM	20. Authorized Signature:	21. Approval/Certificate No:
17. Name (Typed or Printed): JUAN LAGUNAS	18. Date: SEP-09-2010	22. Name (Typed or Printed):	23. Date:

USER/INSTALLER RESPONSIBILITIES

It is important to understand that the existence of this document alone does not automatically constitute authority to install the part/component/assembly.

Where the user/installer perfoms work in accordance with the national regulations of an airworthiness authority different than the airworthiness authority of the country specified in Block 1, it is essential that the user/installer ensures that his/her airworthiness authority accepts parts/components/assemblies from the airworthiness authority of the country specified in Block1.

Statements in Blocks14 and 19 do not constitute installation certification. In all cases, aircraft maintenence records must contain an installation certification issued in accordance with the national regulations by the user/installer before the aircraft may be flown.

* Installer must cross check elgibility with applicable technical data.

ANCRA INTERNATIONAL LLC
4880 West Rosecrans Avenue
Hawthorne, California 90250
Phone: (310) 973-5000 • FAX: (310) 973-1138

Shipping List Number700988-4

Customer Order		Order Date	Page
30066163		11-03-10	1

Ship To: 100706
AVIO-DIEPEN INC.
561 Airport South Parkway
Suite#500
Atlanta, GA 30349

Bill To: 100706
AVIO-DIEPEN INC.
561 Airport South Parkway
Suite#500
Atlanta, GA 30349

hip Via: FedEx Express Saver Contact : RAY HALL
hip from: W ANCRA WEST HAWTHORNE Freight Terms : COL

rd Ent By: DJohnson

no	Item Number	Description	Sell UM	Sell Qty ....Ship...	To Stk UM	Bin Loc	Stock Qty To Ship	Shipped Qty/UM
5	40191-11		EA	600	EA	STOCK	600	600

Facility W :FITTING ASSY PANEL
Rev. Level: BC

** Special Instructions **
****
******
FEDEX SAVER ACCT# 1483-7993-9
****
****
AVIO-D PO# NUMBER MUST BE ON BILL OF LADING
==========DO NOT INSURE==========
==========
*** ALL SEAT TRACK PRODUCTS ***
PART MARK TRACK NUMBER WITH STAMP
<<<DO NOT USE EXTRUSION NUMBER>>>
(ALL) HEAT TREAT LOT #S MUST BE LISTED ON CofC
****
****
ANCRA QUALITY:
ISSUE 8130-3 FOR 40351-12 / 40191-11

Allocated: 12-15-10
Printed: 12-15-10 07:53:54

FORM CS-7 REV. N/C

ANCRA INTERNATIONAL LLC
4880 West Rosecrans Avenue
Hawthorne, California 90250
Phone: (310) 973-5000 • FAX: (310) 973-1138

Shipping List Number700988-4

Customer Order		Order Date	Page
30066163		11-03-10	2

Ship To: 100706
AVIO-DIEPEN INC.
561 Airport South Parkway
Suite#500
Atlanta, GA 30349

Bill To: 100706
AVIO-DIEPEN INC.
561 Airport South Parkway
Suite#500
Atlanta, GA 30349

hip Via: FedEx Express Saver Contact : RAY HALL
hip from: W ANCRA WEST HAWTHORNE Freight Terms : COL

rd Ent By: DJohnson

n o	Item Number	Description	Sell UM	Sell Qty ....Ship...	To Stk UM	Bin Loc	Stock Qty To Ship	Shipped Qty/UM

CERTIFICATE OF CONFORMANCE

WE HEREBY CERTIFY THAT THE ABOVE STATED PART NUMBERS REPRESENTED ARE NEW AND HAVE BEEN MANUFACTURED AND INSPECTED IN ACCORDANCE WITH OUR QUALITY ASSURANCE MANUAL, ALL RELEVANT DRAWINGS, SPECIFICATIONS, PURCHASE ORDER REQUIREMENTS, AND LEGIBLY MARKED IN ACCORDANCE WITH FAR 45.15, IF APPLICABLE.

AS SUCH, THESE PRODUCTS CONFORM TO CURRENT APPLICABLE AIRWORTHINESS REGULATIONS. ALL CHEMICAL, PHYSICAL OR FUNCTIONAL TEST REPORTS RELEVANT TO THE CERTIFICATION OF CONFORMANCE ARE ON FILE IN OUR QUALITY ASSURANCE OFFICE.

INSPECTOR Juan Lopuna DATE 12/15/2010

Shortage Claim Policy

Ancra customer is responsible for inspecting incoming shipments. Ancra must be notified within fifteen(15) days of receipt of shipment if material is not as ordered, quantity is either surplus or short, or if any damage has occurred in shipment. No claims submitted to Ancra will be accepted after fifteen(15) days of receipt.

Pay Terms NET 30

FORM CS-7 REV. N/C

1. Approving National Aviation Authority / Country	2.	3. Form Tracking Number:
FAA / United States	**AUTHORIZED RELEASE CERTIFICATE** *FAA Form 8130-3, AIRWORTHINESS APPROVAL TAG*	700988-4

4. Organization Name and Address: ANCRA INTERNATIONAL LLC
4880 WEST ROSECRANS AVENUE
HAWTHORNE CA 90250
PRODUCTION CERTIFICATE No. (721NM)

5. Work Order,Contract,or Invoice Number: 30066163

6. Item	7. Description	8. Part Number	9 Eligibility *	10. Quantity	11. Serial/Batch Number	12. Status/Work
1	FITTING ASSY.	40191-11	N/A	600	N/A	NEW

13. Remarks

Airworthiness Approval

AVIO-DIEPEN INC.

14. Certifies the items identified above were manufactured in conformity to :

[X] Approved design data and are in a condition for safe operation

[ ] Non-approved design data specified in block 13

19. [ ] 14 CFR 43.9 Return to Service [✓] Other regulation specified in Block 13

Certifies that unless specified inBlock 13, the work identified in Block12 and described in Block13 was accomplished in accordance with Title 14 Code of Federal Regulations, part 43 and in respect to that work, the items are approved for return to service.

15. Authorized Signature:	16. Approval/ Authorization No:	20. Authorized Signature:	21. Approval/Certificate No:
Juan Lagunas	DMIR-660010-NM		
17. Name (Typed or Printed):	**18. Date:**	**22. Name (Typed or Printed):**	**23. Date:**
JUAN LAGUNAS .	DEC-15-2010		

USER/INSTALLER RESPONSIBILITIES

It is important to understand that the existence of this document alone does not automatically constitute authority to install the part/component/assembly.

Where the user/installer perfoms work in accordance with the national regulations of an airworthiness authority different than the airworthiness authority of the country specified in Block 1, it is essential that the user/installer ensures that his/her airworthiness authority accepts parts/components/assemblies from the airworthiness authority of the country specified in Block1.

Statements in Blocks14 and 19 do not constitute installation certification. In all cases, aircraft maintenence records must contain an installation certification issued in accordance with the national regulations by the user/installer before the aircraft may be flown.

* Installer must cross check elgibility with applicable technical data.

ANCRA INTERNATIONAL LLC
4880 West Rosecrans Avenue
Hawthorne, California 90250
Phone: (310) 973-5000 • FAX: (310) 973-1138

Shipping List Number 703762-5

Customer Order		Order Date	Page
30067586		12-22-10	1

Ship To: 100706
AVIO-DIEPEN INC.
561 Airport South Parkway
Suite#500
Atlanta, GA 30349

Bill To: 100706
AVIO-DIEPEN INC.
561 Airport South Parkway
Suite#500
Atlanta, GA 30349

Ship Via: FED-EX FREIGHT Contact : RAY HALL
Ship from: W ANCRA WEST HAWTHORNE Freight Terms : COL
Upd Ept By: DJohnson

Line No	Item Number	Description	Sell UM	Sell Qty To Ship	UM	Bin Loc	Stock Qty To Ship	Shipped Qty/UM
4	40351-10		EA	500	EA	STOCK	500	500

Facility W :STUD ASSY PANEL
Rev. Level: F

** Special Instructions **
****
******
FEDEX LTL 1866 3934 585
****
****
AVIO-D PO# NUMBER MUST BE ON BILL OF LADING
==========DO NOT INSURE==========
==========
*** ALL SEAT TRACK PRODUCTS ***
PART MARK TRACK NUMBER WITH STAMP
<<<DO NOT USE EXTRUSION NUMBER>>>
(ALL) HEAT TREAT LOT #S MUST BE LISTED ON CofC
****
****
ANCRA QUALITY ISSUE 8130-3 WHEN AVAILABLE:
40041-26
45387-10
43995-23
40351-12
40000-11

Allocated: 02-23-11
Printed: 02-23-11 08:26:50

ORM CS-7 REV. N/C

ANCRA INTERNATIONAL LLC
4880 West Rosecrans Avenue
Hawthorne, California 90250
Phone: (310) 973-5000 • FAX: (310) 973-1138

Shipping List Number703762-5

Customer Order		Order Date	Page
30067586		12-22-10	2

Ship To: 100706
AVIO-DIEPEN INC.
561 Airport South Parkway
Suite#500
Atlanta, GA 30349

Bill To: 100706
AVIO-DIEPEN INC.
561 Airport South Parkway
Suite#500
Atlanta, GA 30349

Ship Via: FED-EX FREIGHT Contact : RAY HALL
Ship from: W ANCRA WEST HAWTHORNE Freight Terms : COL
Order Ent By: DJohnson

Ln No	Item Number	Description	Sell UM	Sell Qty Ship	To Stk UM	Bin Loc	Stock Qty To Ship	Shipped Qty/UM

CERTIFICATE OF CONFORMANCE

WE HEREBY CERTIFY THAT THE ABOVE STATED PART NUMBERS REPRESENTED ARE NEW AND HAVE BEEN MANUFACTURED AND INSPECTED IN ACCORDANCE WITH OUR QUALITY ASSURANCE MANUAL, ALL RELEVANT DRAWINGS, SPECIFICATIONS, PURCHASE ORDER REQUIREMENTS, AND LEGIBLY MARKED IN ACCORDANCE WITH FAR 45.15, IF APPLICABLE.

AS SUCH, THESE PRODUCTS CONFORM TO CURRENT APPLICABLE AIRWORTHINESS REGULATIONS. ALL CHEMICAL, PHYSICAL OR FUNCTIONAL TEST REPORTS RELEVANT TO THE CERTIFICATION OF CONFORMANCE ARE ON FILE IN OUR QUALITY ASSURANCE OFFICE.

SAUL ZAZUETA

INSPECTOR _____ DATE 2/23/11

Shortage Claim Policy

Ancra customer is responsible for inspecting incoming shipments. Ancra must be notified within fifteen(15) days of receipt of shipment if material is not as ordered, quantity is either surplus or short, or if any damage has occurred in shipment. No claims [redacted] Ancra will be accepted after fifteen(15) days of receipt.

Pay Terms NET 30

FORM CS-7 REV. N/C

GLOBAL FORWARDING

H4UB2648+

Housebill Number **4UB2648**	
Housebill Destination **MNL**	Total No. of pieces **2**
Date **16MAR2011**	Weight of Housebill Pieces **2.0 LB**
Origin **ATL**	Destination
Additional info	
Service type	Mode of Transport **AIR**
Sender Address AVIO-DIEPEN INC 561 AIRPORT SOUTH PARKWAY SUITE 500 ATLANTA 30349 US	Delivery Address **PH**

GLOBAL FORWARDING

H4UB2648+

Housebill Number **4UB2648**	
Housebill Destination **MNL**	Total No. of pieces **2**
Date **16MAR2011**	Weight of Housebill Pieces **2.0 LB**
Origin **ATL**	Destination
Additional info	
Service type	Mode of Transport **AIR**
Sender Address AVIO-DIEPEN INC 561 AIRPORT SOUTH PARKWAY SUITE 500 ATLANTA 30349 US	Delivery Address **PH**

AVIO-DIEPEN INC.
561 AIRPORT SOUTH PARKWAY, SUITE 500
ATLANTA, GEORGIA 30349
UNITED STATES
FAX : +1-770-996-8430
SITA: HAGME7X

EXPORT INVOICE

Number : 489903 Page 1 of 2
Date : 2011-03-16
Contact: Eric Jackson
Phone : +1-770-996-6430

-Consignee-
AERO DESIGN LTD
2013-39TH AVENUE NE
CALGARY ALBERTA T2E 6R7
CANADA 1

-Sold to-
AERO DESIGN LTD
2013-39TH AVENUE NE
CALGARY ALBERTA T2E 6R7
CANADA

-Ship to-
AERO DESIGN LTD
2013-39TH AVENUE NE
CALGARY ALBERTA T2E 6R7
CANADA

Attn : JEFF CLARKE
Your Ref : 11020

Your VATNO :
Our VATno : -
Our orderno : 405752/AER736

Prices : EX WORKS ATLANTA
Delivery : EX WORKS ATLANTA
Customs : Free -
Transport : UPS GROUND TRACKING
Account no : 1016Y4

Criticality : Normal

It.	Partno and description	Quantity	Unit	Unit-price	Disc%	Amount
001	40191-10 BASE FITTING 73181900 YOUR ITEM: 1 COUNTRY OF ORIGIN: UNITED STATES ECCN CODE: EAR99 SCHEDULE B: 8803300030	4.0	EACH	40.49	0.0	161.96
002	40191-11 BASE FITTING 73182900 YOUR ITEM: 2 COUNTRY OF ORIGIN: UNITED STATES ECCN CODE: EAR99 SCHEDULE B: 8803300030	6.0	EACH	34.52	0.0	207.12

APPLICABLE TO GOODS SUBJECT TO THE EAR
These commodities, technology or software were exported from the U.S.A. in accordance with the Export Administration Regulations (EAR).
Diversion contrary to U.S. law is prohibited.

This export invoice is issued for transportation and customs purposes only.
DO NOT PAY ON THIS INVOICE
Original invoice will follow.

AVIO-DIEPEN INC.
561 AIRPORT SOUTH PARKWAY, SUITE 500
ATLANTA, GEORGIA 30349
UNITED STATES
FAX : +1-770-996-8430
SITA: HAGME7X

EXPORT INVOICE

Number : 489903
Date : 2011-03-16
Contact: Eric Jackson
Phone : +1-770-996-6430

-Consignee-
AERO DESIGN LTD
2013-39TH AVENUE NE
CALGARY ALBERTA T2E 6R7
CANADA 1

-Sold to-
AERO DESIGN LTD
2013-39TH AVENUE NE
CALGARY ALBERTA T2E 6R7
CANADA

It.	Partno and description	Quantity	Unit	Unit-price	Disc%	Amount
003	40351-10 THREADED STUD 73181900 YOUR ITEM: 3 COUNTRY OF ORIGIN: UNITED STATES ECCN CODE: EAR99 SCHEDULE B: 8803300030	4.0	EACH	24.99	0.0	99.96

USD 469.04

AERO Design Ltd.
2013 - 39th Avenue N.E.
Calgary, Alberta, T2E 6R7
Phone: (403) 250-8027
Fax: (403) 250-8333

Purchase Order

P.O. Number	**11019**
Date	07-Feb-11

Vendor:	
Name:	Aircraft Spurce and Specialty Co.
Address:	P.O. Box 4000 225 Airport Circle Corona, CA 91720
Phone:	1-800-824-1930
Fax:	951-372-0555
Attention:	0
Currency:	CAD

Ship To:	
Name:	AERO Design Ltd.
Address:	2013 - 39th Avenue N.E. Calgary, Alberta, T2E 6R7
Phone:	(403) 250-8027
Fax:	(403) 250-8333
Attention:	Richard Rathwell

ITEM	DESCRIPTION	QTY	RATE	AMOUNT
1	03-13950-4 - 4130 Rect Tube 1x1.75x0.065 x 4'	2	42.75	85.50
2	01-01133 - Metal Certification	1	15.75	15.75
	Freight	1	21.50	21.50
		Subtotal		122.75
	Sales Tax	GST	5.00%	6.14
		Total	**CAD**	**$128.89**

AIRCRAFT SPRUCE CANADA

BRANTFORD MUNICIPAL AIRPORT
150 AVIATION AVENUE, BRANTFORD, ON N3T 5L7
ADMINISTRATION (951) 372-9555 • FAX (519) 759-8964
CALL TOLL FREE (877) 795-2278 • STORE (519) 759-5017

DATE: 02/07/11
PLEASE RETURN THIS PORTION
WITH YOUR REMITTANCE
P.O. BOX 3731 • BRANTFORD, ON N3T 6H2

GST# 887652105 PAGE: 1 897748
CUST: 410708

SOLD TO
410708
CHARLES BURGOIN
2013 39TH AVENUE NE
CALGARY, AB T2E 6R7
CANADA

SHIP TO
CHARLES BURGOIN
2013 39TH AVENUE NE
CALGARY, AB T2E6R7

NOTE: ANY SHORTAGES MUST BE REPORTED WITHIN 10 DAYS. **BACKORDERED PRODUCTS WILL SHIP AS SOON AS AVAILABLE.**

ORDER NO.	INVOICE NO.	CUSTOMER P.O. NO.	SHIP VIA	TERMS	DATE SHIPPED
317546	897748	11019	PUROLATOR COMM	CREDIT CARD	02/07/11

QUANTITY SHIPPED	BACK ORDERED	DESCRIPTION	DISC.	UNIT PRICE	EXTENSION
1.00		01-01133 METAL CERTIFICATION		15.750	15.75
2.00		03-13950-4 4130 RECT TUBE 1X1-3/4X065 4FT		42.750	85.50
		THANK YOU FOR YOUR ORDER. PLEASE CALL ME DIRECTLY AT EXT 234 THE NEXT TIME YOU WISH TO PLACE AN ORDER WITH AIRCRAFT SPRUCE. MIKE SOTO 877-477-7823			

CERTIFICATE OF CONFORMANCE
The products on this invoice have been obtained through authorized manufacturers or distributors and to the best of our knowledge fully meet all applicable specifications. There may be products on this invoice which are not approved for use on FAA type certificated aircraft. Purchaser is responsible for determining suitability of any part purchased from Aircraft Spruce for installation on their certificated or experimental aircraft.

James J. Irwin, President

SUBTOTAL	TAX	MISC. CHARGE	FREIGHT	PAID WITH ORDER	BALANCE DUE
101.25	GST 6.14	0.00	21.50	-128.89	CAD 0.00

WAIVER OF LIABILITY AND INDEMNIFICATION AGREEMENT-Inasmuch as Aircraft Spruce & Speciality Company has no opportunity to supervise the installation, or maintenance of parts supplied by it, nor any opportunity to participate in the design or manufacture of the products it sells or of the various homebuilt and certificated aircraft in which its parts are utilized, the purchaser, by placing this order with Aircraft Spruce & Speciality Company and accepting the parts, agrees that all materials purchased will be used solely at purchaser's risk and that the purchaser will indemnify and hold Aircraft Spruce & Specialty Company, its owners and employees, free and harmless from all loss, liability, and damage resulting from claims brought by reason of any alleged failure or defect of any parts or parts supplied by Aircraft Spruce & Specialty Company. If this agreement is unacceptable to purchaser, the purchaser will immediately return in new condition all products listed on this invoice to Aircraft Spruce for refund of purchase price.

When returning merchandise:

- Please call Customer Service for an RMA number.
- Write the RMA number on each package.
- Fill in the information below and enclose this form with the package.
- Insure and ship to: Aircraft Spruce Canada
  150 Aviation Avenue
  Brantford, ON N3T 5L7
  Attn: Customer Return

PRODUCT WARRANTY

In cooperation with the manufacturers we represent, Aircraft Spruce & Specialty Co. warrants for a period of one year (on most products) from the date of original purchase its products to be free from defects in material and workmanship. Aircraft Spruce & Specialty Co.'s obligation under this warranty is limited to repair or replacement of the purchased product only, and under no circumstances shall Aircraft Spruce & Specialty Co. be liable for any loss, damage, injury, cost of repair or consequential damages of any kind in connection with the sale, use or repair of any product purchased from Aircraft Spruce & Specialty Co.

RETURN POLICY

Merchandise may be returned for credit or refund within 30 days from date of purchase if received in resaleable condition - packed in original manufacturer's box, complete with instructions and all components (if applicable). A copy of the original order showing purchase or information stating the invoice number and date of purchase, with reason for return must accompany the article. Do not mail purchase information in letter form under separate cover. A 15% restocking charge may be applicable to all merchandise returned to cover costs involved in processing the return. Do not return any products C.O.D. as it cannot be accepted by our warehouse. Call first for return authorization and instructions.

RETURNED MERCHANDISE

Item Number	Description	Price

If you have any questions about your order call Toll Free (877) 4-SPRUCE (877-477-7823)

PLEASE SEND

Item Numbe	Description	Price

Reason for Return - Please check appropriate box:

❑ Wrong item Ordered ❑ Quality Unsatisfactory ❑ Arrived Late ❑ Other

❑ Defective ❑ Not As Described ❑ Wrong Item Sent ❑ Core Credit

NOTE: CREDIT CANNOT BE ISSUED WITHOUT DETAILS COMPLETED BELOW.

DETAILS:_____

_____

TW METALS
O'Neal High-Performance Metals Group

05300

PACKING SLIP

ORDER NO.: 50356438 FROM: LOSA PAGE 1

CUST NUMBER: 5002490 **NET WGT:** 377.146 REQ.DATE: 12/07/10 CONFIRMED

SOLD TO:
AIRCRAFT SPRUCE & SPECIALTY
P.O. BOX 4000
CORONA CA 92878-4000

SHIP TO:
AIRCRAFT SPRUCE
225 AIRPORT CIRCLE
CORONA CA 92880

SALESPERSON:	JIMMY DURAN	DISTRICT:	LOS ANGELES
TERMS:	1/2% 10 NET 30	VIA:	OUR TRUCK FOR
F.O.B.:	DESTINATION	FREIGHT:	PREPAID
CUST ORD NO.:	G37313	RELEASE NO.:	
		RECEIVING PHONE:	909-372-9555

LINE ITEM DESCRIPTION WIDTH LENGTH

0001 33203 SMLS 4130 6736 7/8 X .083 17/24 FT
7/8 OD X .083 WALL

QTY: 80.000 FT WT: 67.392 PC: 4 SHP: 96.000 FT

PART#: 03-05700
** 1 TEST REPORTS REQUIRED **
** 2 CERTS REQUIRED **
PO:49238193 HT:105111 PC: 4 SLB/CL:105111
MELT:SPAIN MFG: UNITED STATES

4 @ 24 ✓

0002 33433 SMLS 4130 6736 1-1/8 X .049 17/24 FT
1-1/8 OD X .049 WALL

QTY: 160.000 FT WT: 90.086 PC: 8 SHP: 160.000 FT ✓

PART#: 03-07000
** 1 TEST REPORTS REQUIRED **
** 2 CERTS REQUIRED **
PO:49220033 HT:556124 PC: 8 SLB/CL:556124
MELT:GERMANY MFG: GERMANY

8 @ 20FT

0003 33838 SMLS 4130 6736 2 X .049 17/24 FT
2 OD X .049 WALL

QTY: 100.000 FT WT: 98.012 PC: 4 SHP: 96.000 FT

PART#: 03-10710
** 1 TEST REPORTS REQUIRED **
** 2 CERTS REQUIRED **

Rec
12/29/10
CM

4 @ 24FT

THANK YOU FOR THIS ORDER

TERMS AND CONDITIONS APPLICABLE TO THE SALE OF THESE PRODUCTS ARE SET FORTH ON THE REVERSE SIDE FOR YOUR CAREFUL REVIEW.

11019

TW METALS
O'Neal High-Performance Metals Group

PACKING SLIP

ORDER NO.: 50356438 FROM: LOSA PAGE 2

CUST NUMBER: 5002490 **NET WGT:** 377.146 REQ.DATE: 12/07/10 CONFIRMED

SOLD TO:
AIRCRAFT SPRUCE & SPECIALTY
P.O. BOX 4000
CORONA CA 92878-4000

SHIP TO:
AIRCRAFT SPRUCE
225 AIRPORT CIRCLE
CORONA CA 92880

SALESPERSON: JIMMY DURAN
TERMS: 1/2% 10 NET 30
F.O.B.: DESTINATION
CUST ORD NO.: G37313

DISTRICT: LOS ANGELES
VIA: OUR TRUCK FOR
FREIGHT: PREPAID
RELEASE NO.:
RECEIVING PHONE: 909-372-9555

LINE ITEM DESCRIPTION WIDTH LENGTH

PO:49216121 HT:541419 PC: 4 SLB/CL:541419
MELT:GERMANY MFG: UNITED STATES

0004 35281 SMLS 4130 6736 7/8 X 7/8 X.065 17/24 FT
7/8 SQ X .065 WALL

QTY: 40.000 FT WT: 33.648 PC: 2 SHP: 47.000 FT

PART#: 03-13300
** 1 TEST REPORTS REQUIRED **
** 2 CERTS REQUIRED **
PO:49215056 HT:552922 PC: 2 SLB/CL:552922
MELT:GERMANY MFG: UNITED STATES

2 @ 23 FT

0005 35462 SMLS 4130 6736 1-3/4 X 1 X.065 17/24 FT
1-3/4 X 1 X .065 WALL

QTY: 80.000 FT WT: 88.008 PC: 4 SHP: 76.000 FT

PART#: 03-13950
** 1 TEST REPORTS REQUIRED **
** 2 CERTS REQUIRED **
PO:49226486 HT:207121058 PC: 4 SLB/CL:207121058
MELT:CHINA MFG: CHINA

4 @ 19 FT

RECEIVED 1 PALLET/TUBE/BUNDLE
SUBJECT TO INSPECTION
X
DATE 12-7-10

AREA	TYPE OF PKG	PKGS	PACK INFO CRS	WEIGHT	WIDTH	LENGTH	HGHT
OT	BUNDLE	1.000		370.000		288.0000	

THANK YOU FOR THIS ORDER

TERMS AND CONDITIONS APPLICABLE TO THE SALE OF THESE PRODUCTS ARE SET FORTH ON THE REVERSE SIDE FOR YOUR CAREFUL REVIEW.

TW METALS
O'Neal High-Performance Metals Group

PACKING SLIP

ORDER NO.: 50356438 FROM: LOSA PAGE 3

CUST NUMBER: 5002490 **NET WGT:** **377.146** REQ.DATE: 12/07/10 CONFIRMED

SOLD TO:
AIRCRAFT SPRUCE & SPECIALTY
P.O. BOX 4000
CORONA CA 92878-4000

SHIP TO:
AIRCRAFT SPRUCE
225 AIRPORT CIRCLE
CORONA CA 92880

SALESPERSON:	JIMMY DURAN	DISTRICT:	LOS ANGELES
TERMS:	1/2% 10 NET 30	VIA:	OUR TRUCK FOR
F.O.B.:	DESTINATION	FREIGHT:	PREPAID
CUST ORD NO.:	G37313	RELEASE NO.:	
		RECEIVING PHONE:	909-372-9555

LINE	ITEM DESCRIPTION	WIDTH	LENGTH
		1.000	370.000

BY: JD
RT 001-

UNLOAD TYPE: PER CUSTOMER SP

DATE SHIPPED _____

DATE FILLED

THANK YOU FOR THIS ORDER

TERMS AND CONDITIONS APPLICABLE TO THE SALE OF THESE PRODUCTS ARE SET FORTH ON THE REVERSE SIDE FOR YOUR CAREFUL REVIEW.

TW METALS
O'Neal High-Performance Metals Group

PACKING SLIP

ORDER NO.: 50356438 FROM: LOSA PAGE 4

CUST NUMBER: 5002490 NET WGT: 377.146 REQ.DATE: 12/07/10 CONFIRMED

SOLD TO:
AIRCRAFT SPRUCE & SPECIALTY
P.O. BOX 4000
CORONA CA 92878-4000

SHIP TO:
AIRCRAFT SPRUCE
225 AIRPORT CIRCLE
CORONA CA 92880

SALESPERSON: JIMMY DURAN
TERMS: 1/2% 10 NET 30
F.O.B.: DESTINATION
CUST ORD NO.: G37313
VIA: OUR TRUCK FOR
FREIGHT: PREPAID
RELEASE NO.:
RECEIVING PHONE: 909-372-9555

DISTRICT: LOS ANGELES
2211 TUBEWAY AVENUE
CITY OF COMMERCE CA 90040

"TW Metals MSDS data is available on our web site at www.twmetals.com. MSDS data can be found under the Technical Resources Tab, Product Statistics & Data and the TW Metals MSDS's heading. If you do not have web site access you may telephone 610-458-1300 and we will mail or fax a copy of our current MSDS data to your location."

"CERTIFICATE OF CONFORMANCE"

"TW Metals certifies that the material supplied on this purchase order and contained in the heat/lot number referenced above has been manufactured, inspected, and tested in accordance with the material specification. These records are on file at TW Metals. Packaging material for shipments to Europe and China consists of manufactured wood products and complies with the European emergency measures for coniferous non-manufactured wood packing material"

Authorized Test Report Clerk_____ **Date: 12/06/10**

TWM254

THANK YOU FOR THIS ORDER

TERMS AND CONDITIONS APPLICABLE TO THE SALE OF THESE PRODUCTS ARE SET FORTH ON THE REVERSE SIDE FOR YOUR CAREFUL REVIEW.

AERO Design Ltd.
2013 - 39th Avenue N.E.
Calgary, Alberta, T2E 6R7
Phone: (403) 250-8027
Fax: (403) 250-8333

Purchase Order

P.O. Number	**11017**
Date	04-Feb-11

Vendor:	
Name:	Top Gun Coatings
Address:	#102, 4715 - 13 Street N.E. Calgary, AB T2E 6M3
Phone:	250-5393
Fax:	250-5392
Attention:	Hugh
Currency:	CAD

Ship To:	
Name:	AERO Design Ltd.
Address:	2013 - 39th Avenue N.E. Calgary, Alberta, T2E 6R7
Phone:	(403) 250-8027
Fax:	(403) 250-8333
Attention:	Jeff

ITEM	DESCRIPTION	QTY	RATE	AMOUNT
	Powdercoat: Sky White			
	AS350 LH Beams (9 pairs)	9	30.00	270.00
	Med Steps (AS350 long)	4	30.00	120.00
	Brackets (AS350 long step)	8	10.00	80.00
	Mini-step (display)	1	5.00	5.00
		Subtotal		475.00
	Sales Tax	GST	5.00%	23.75
		Total	**CAD**	**$498.75**

PACKING SLIP

TOP GUN COATINGS INC.

#101, 4715 - 13th STREET N.E., CALGARY, ALBERTA T2E 6M3
PH: (403) 250-5393 FAX: (403) 250-5392
www.topguncoatings.com

TO: AERO DESIGN 2013 - 39 AVENUE N.E. CALGARY, AB T2E 6R7 PH: (403) 250-8027 FAX: (403) 250-8333	DATE: FEBRUARY 4, 2011 INVOICE NO: 41596 PO NO: 11017 ATTN: JEFF CLARKE

SHIPPED VIA	TERMS
PICK UP	30 DAYS

QUANTITY	DESCRIPTION	UNIT PRICE	AMOUNT
	POWDER: SKY WHITE		
9 SETS	SMALL BEAMS (18 PCS)	$30.00	$270.00
4	MED STEPS	$30.00	$120.00
8	BRACKETS	$10.00	$80.00
1	MINI STEP	$5.00	$5.00
		SUB-TOTAL	$475.00
		GST (5%)	$23.75
		SHIPPING & HANDLING	
		TOTAL DUE	$498.75

GST #122043409

Authorized Signature

THANK-YOU FOR YOUR ORDER

AERO Design Ltd.
2013 - 39th Avenue N.E.
Calgary, Alberta, T2E 6R7
Phone: (403) 250-8027
Fax: (403) 250-8333

Purchase Order

P.O. Number	**11015**
Date	28-Jan-11

Vendor:

Name: Air Liquide
Address: 3004 - 54th Ave. S.E.
Calgary, AB T2C 0A7
Phone: 403-291-0100
Fax: 403-291-1129
Attention: 0
Currency: CAD

Ship To:

Name: AERO Design Ltd.
Address: 2013 - 39th Avenue N.E.
Calgary, Alberta, T2E 6R7
Phone: (403) 250-8027
Fax: (403) 250-8333
Attention: Jeff Clarke

ITEM	DESCRIPTION	QTY	RATE	AMOUNT
1	0.045" ER308L Mig Wire 2 lb spool	1		0.00
		Subtotal		0.00
	Sales Tax	GST	5.00%	0.00
		Total	**CAD**	**$0.00**

AIR LIQUIDE™

Air Liquide Canada Inc.
BAY 22 2520 - 23RD ST. N.E.
CALGARY AB T2E 8L2
Phone: (403) 291-0100 Fax:(403) 291-1129

SHIPPING ORDER NO.
PACKING SLIP NO.

BACK ORDER

40535057

28-JAN-2011 12:41 (CST)

Page 1 of 1

ORIGINAL DOCUMENT
40483486

Nº DU BON DE LIVRAISON

SOLD TO:
VENDU À: AERO DESIGN LTD
2013 39TH AVE NE
CALGARY AB T2E 6R7

SHIP TO:
LIVRÉ À: AERO DESIGN LTD
403-250-8027
2013 39TH AVE NE
CALGARY AB T2E 6R7
403-250-8027

CUSTOMER NO. DU CLIENT	PURCHASE ORDER NO. DE COMMANDE / REQUISITION	ORDER DATE DATE DE COMMANDE	REQUIRED DATE DATE REQUISE	PURCHASER'S NAME / NOM DE L'ACHETEUR	ORDER TAKEN BY / COMMANDE PRISE PAR
1058384-001	11015	28-JAN-2011	31-JAN-2011	JEFF	MALANOWICH, TYLER

ORDER METHOD / MÉTHODE DE COMMANDE	SHIPPED VIA / EXPÉDIÉ PAR	DELIVERY ZONE ZONE DE LIVRAISON	B/L NO. DE CONNAISSEMENT	TOTAL WEIGHT POIDS TOTAL	TERMS / TERMES
Walkin	Customer Pickup				NET 30

ITEM NUMBER / NUMÉRO D'ARTICLE DESCRIPTION	ORDERED COMMANDÉ	SHIPPED EXPÉDIÉ	RETURNED RETOURNÉ	BACK ORDER EN SOUFFRANCE	TOTAL VOLUME	UOM / UDM	TX	PRICE / PRIX	EXTENDED PRICE EXTENSION DU PRIX
TEH-W308L1209 WIRE, MIG, STAINLESS STEEL, TECHNIWELD, 308L, 1.2MM (0.045") X 0.9KG	0.9	0.9				KG			
ALS-REGCONSERV REGULATORY COMPLIANCE & SERVICE	1	1				EA			

THIS CUSTOMER USES GAS-ARG50XPR ONLY-HE HAS A LEASE*** NO RENTALS***

All of us at Air Liquide would like to take the opportunity of this Holiday Season to thank you and to wish you a wonderful New Year filled with good health and success in a safe environment.

PICKED BY / RAMASSÉ PAR

DELIVERED DATE / DATE LIVRÉE

RECEIVED BY / REÇU PAR

TOTAL
CYLINDERS / BOUTEILLES

SUB TOTAL SOUS-TOTAL	
G.S.T. / T.P.S. H.S.T.	
P.S.T. Q.S.T. / T.V.Q.	
TOTAL	

G.S.T. Registration# R100767532 Q.S.T. Registration# 10-12039758

SEE REVERSE FOR TERMS AND CONDITIONS / VOIR AU VERSO POUR LES TERMES ET CONDITIONS

CUSTOMER COPY - COPIE DU CLIENT

741 (02-02) REL

TERMS AND CONDITIONS

1. PRODUCT SPECIFICATION All products, materials and industrial, medical and specialty gases sold hereunder (the "Goods") as well as Seller's gas containers used in the sale of gases (the "Cylinders"), shall conform to the standard specifications established by Seller and shall comply with applicable codes and standards.

2. CYLINDERS All of Buyer's requirements of Product shall be supplied by Seller in Seller's Cylinders. Buyer agrees that the Cylinders and any part or accessory thereof (including, as the case may be, the quick connective coupling device, the **SYGAL**™ portable gas cylinder, the integrated regulator flowmeter and the filling station) are and shall remain the sole property of Seller. Buyer shall have the custody, care and control of the Cylinders. Buyer will not allow the Cylinders to become subject to any such lien and encumbrance or claim by third party and shall, if any, promptly remove and procure the release of any such lien, encumbrance of claim. Buyer assumes all risk of losss or damage to the Cylinders or to any part or accessory thereof (excluding the on/off lever for **ALTOP**™ Cylinders), even in case of force majeure, from Cylinders' delivery until Cylinders' return to Seller's point of shipment. Buyer shall notify Seller immediately of any damage to or malfunction of the Cylinders. Buyer shall not, nor shall Buyer allow any third party to alter, adjust, repair or tamper with the Cylinders or any part or accessory thereof. Buyer agrees, even in the case of force majeure, not to have the Cylinders recharged with any product, gas, liquid or other material whatsoever by any person, firm or corporation other than Seller without the prior written consent from Seller.

3. INSPECTION Buyer shall inspect the Goods and Cylinders upon their arrival. Should Buyer find that the Goods do not conform to the description herein, Buyer shall give written notice to that effect to Seller within 10 days from the arrival of such Goods. Failure of Buyer to give Seller such notice shall constitute an irrevocable acceptance of the Goods, and Buyer shall be bound to pay the full price thereof. If after irrevocable acceptance of the Goods, Buyer, with Seller's written consent, returns the Goods to Seller, a handling charge will be levied on all goods returned for credit, based on seller's policy at the time of return.

4. DELIVERIES All Goods will be delivered F.O.B. to Seller's local producing and delivery facility. Title and risk of loss will pass to Buyer upon delivery.

5. PAYMENT AND TAXES All payments will be made according to the terms of payment on Seller's invoice. If Buyer does not pay on time, Seller may (i) place Buyer on C.O.D., (ii) suspend deliveries, or / and (iii) enter upon Buyer's premises and repossess the Cylinders. Seller shall have the right to charge, on any amount unpaid 30 days after invoice date, interest each month at 2%. Buyer agrees to pay all taxes (if any) upon the sale, delivery, storage, use and rental of the Goods or the Cylinders.

6. WARRANTIES Seller warrants that the Goods delivered to Buyer complies with the standards of the Compressed Gas Association and Seller's standards. If the Goods does not conform to warranty, Buyer's sole remedy is to require Seller to replace the non-conforming Goods at Seller's cost. Buyer understands that in order for Seller to be able to properly investigate, Buyer must notify Seller of all claims within 10 days after occurence. SELLER MAKES NO OTHER WARRANTY OF ANY KIND, EXPRESS OR IMPLIED, INCLUDING WITHOUT LIMITATION, WARRANTIES OF MERCHANTABILITY AND FITNESS FOR A PARTICULAR PURPOSE.

7. LIABILITY AND INDEMNITY Buyer acknowledges having been informed by Seller's representative of the safe method for handling and carrying cylinders and agrees herein to completely discharge the seller of any responsibilities that could result from his decision to carry the Cylinders in an inappropriate way and/or go against the applicable laws. Seller shall not entertain any claims for loss of content based on defective valves or other Cylinder imperfections unless same are made within 10 days after receipt of the respective Cylinders by Buyer and unless the Cylinder is returned to Seller with a tag attached stating the defect within said 10 days. Subject to the limitations contained in section 6, each party will be responsible for and will indemnify the other from and against any and all direct claims and demands, loss or damage to property or persons, at any time caused by or resulting from its negligence, its acts or omissions or those of its agents and employees. Regardless of the circumstances, neither party will be liable to the other for special, indirect or consequential damages howsoever occuring.

8. SAFETY INFORMATION Buyer acknowledges that the Goods are a hazardous chemical, classified as such under the Federal Hazardous Product Act, and that its use, in the workplace, is regulated by the Provincial Occupational Health and Safety Act and Regulations. Buyer acknowledges that there are hazards associated with the transportation, handling, storage, possession and use of the Cylinders and the Goods. Buyer represents that it understands the hazardous nature of the Goods and the Cylinders and that it is its duty to warn, protect and train as appropriate all personnel and third parties, and its property and that of others, who may be exposed to these hazards. Buyer also acknowledges that Seller has provided it with appropriate Material Safety Data Sheet(s). Buyer understands that the Goods and the Cylinders must not be used without first consulting the Material Safety Data Sheet(s). Buyer will make sure all employees and persons who might become exposed to the Goods received and refer to copies of the Material Data Sheet(s).

9. RESERVE OF OWNERSHIP The Seller agrees to sell to the Buyer and the Buyer agrees to purchase from the Seller, the Good(s) described herein, by which the Seller reserves ownership of the Good(s) until full payment of the sale price and subject to the provisions contained herein. All risk of loss, theft or damage to the Good(s) is transferred to the Buyer upon delivery.

10. LIMITATION ON INTENDED USERS The Goods ARE INTENDED FOR ULTIMATE PURCHASE BY COMMERCIAL INDUSTRIAL USERS AND FOR OPERATION BY PERSONS TRAINED AND EXPERIENCED IN THE USE AND MAINTENANCE OF WELDING EQUIPMENT AND INDUSTRIAL, MEDICAL AND SPECIALTY GASES. Except as expressly provided by Seller in writing, the Goods are NOT intended for resale by Buyer to consumers and thereby, Buyer is not authorized to extend Seller's warranties to any consumer.

11. SUCCESSORS AND ASSIGNS This Agreement will be binding upon the parties and their successors and assigns. Buyer will not have the right to assign this Agreement without the prior written consent of Seller, and such consent will not be unreasonably withheld.

12. MODIFICATIONS This Agreement constitutes the entire agreement between the parties concerning its subject matter. No provision of any purchase order of Buyer will alter or add to the terms of the Agreement, and any such provisions will be void. No modification of this Agreement will be binding unless it is in writing and signed by an authorized representative of each party.

13. WAIVER The waiver by either party of any of its rights under this Agreement will not be construed as constituting a precedent.

14. GENERAL DISPOSITIONS Should any provision of this Agreement become invalid or unenforceable, it shall be considered severed from this Agreement and shall not affect the validity of the remainder of the Agreement. This Agreement will be governed and construed according to the laws of the province where the Buyer's Consuming location is located.

TERMES ET CONDITIONS

1. SPÉCIFICATIONS Les produits, équipements, matériaux, gaz industriels, médicaux et spéciaux (les "Biens"), ainsi que les récipients du Vendeur utilisés pour la vente des gaz (les "Bouteilles") sont conformes aux spécifications établies par le Vendeur et aux normes applicables.

2. BOUTEILLES Le vendeur assurera tous les besoins en Produit de l'Acheteur dans les bouteilles du vendeur (les «Bouteilles»). Les Bouteilles et toute pièce ou tout accessoire desdites Bouteilles (incluant le cas échéant, mais sans s'y limiter, le système de couplage rapide, l'unité de gaz portative **SYGAL**™ , le détendeur et le débitmètre intégrés et le poste de remplissage) sont et demeureront en tout temps la propriété entière et exclusive du vendeur. L'Acheteur aura la possession, la garde et le contrôle desdites Bouteilles. L'Acheteur ne pourra hypothéquer, nantir, prêter, céder ou aliéner les Bouteilles, ni créer, souffrir ou permettre aucun privilège, hypothèque ou charge à l'égard des Bouteilles et, s'il en existe, il s'en libérera sans délai et en obtiendra quittance. Jusqu'à ce que les Bouteilles soient retournées par l'Acheteur au vendeur, l'Acheteur assume par les présentes tous les risques de pertes ou de dommages aux Bouteilles ou à toute pièce ou tout accessoire desdites Bouteilles (à l'exclusion du levier de mise en fonction des Bouteilles **ALTOP**™) même si la perte ou ces dommages sont imputables à un cas de force majeure. L'Acheteur avisera immédiatement le vendeur de tout défaut des Bouteilles ou de tous dommages à celles-ci. L'Acheteur ne pourra modifier, régler, réparer ou altérer les Bouteilles ou toute pièce ou tout accessoire desdites Bouteilles, ni permettre à un tiers de le faire. L'Acheteur convient, même dans un cas de force majeure, de ne pas faire remplir les Bouteilles d'un produit, gaz, liquide ou toute autre matière par une personne, entreprise ou corporation autre que le vendeur sans en avoir obtenu au préalable le consentement écrit du vendeur.

3. INSPECTION L'Acheteur devra examiner les Biens dès leur réception. Au cas où l'Acheteur constate que les Biens ne sont pas conforme à la description faite au recto, l'Acheteur en avisera par écrit le Vendeur dans les 10 jours de la réception de ces Biens. Si l'Acheteur omet de donner au Vendeur cet avis, il sera présumé avoir irrévocablement accepté ces Biens et en sera tenu au parfait paiement. Après l'acceptation irrévocable des Biens, si l'Acheteur, avec l'accord écrit du Vendeur, lui retourne ces Biens, des frais de manutention seront appliqués sur ces Biens retournés pour crédit, selon les barèmes du Vendeur alors en vigueur.

4. LIVRAISON Les Biens seront livrés par le Vendeur f.à.b. son installation locale de production et de livraison. Le droit de propriété et tous les risques de perte ou de dommages seront transférés à l'Acheteur à la livraison.

5. PAIEMENT ET TAXES Tous les paiements seront effectués selon les modalités de paiement prévues sur les factures du Vendeur. Si l'Acheteur ne paie pas à temps, le Vendeur peut: (i) décider d'approvisionner l'Acheteur contre paiement comptant sur livraison, (ii) suspendre les livraisons et/ou (iii) pénétrer sur la propriété de l'Acheteur et prendre immédiatement possession des Bouteilles. Le Vendeur aura le droit de charger, sur tout montant en souffrance, 30 jours après la date de facturation, un intérêt mensuel de 2%. L'Acheteur convient de payer les taxes et tarif (s'il en est) attribuables ou afférents à l'achat, l'entreposage et à la vente des Biens ainsi qu'à la location des Bouteilles.

6. GARANTIE Le Vendeur garantit que les Biens livrés à l'Acheteur seront conforme aux normes de la Compressed Gas Association et aux spécifications courantes du Vendeur. Si un Bien n'était pas conforme aux normes et spécificaitons précitées, le seul recours de l'Acheteur sera de refuser ledit Bien et de demander au Vendeur de remplacer ledit Bien aux frais du Vendeur. Le défaut de l'Acheteur de présenter au Vendeur une réclamation à l'égard du Bien livré en vertu des présentes dans les 10 jours de sa réception, constituera de la part de l'Acheteur une renonciation à toute autre réclamation relative audit Bien. LE VENDEUR NE DONNE AUCUNE AUTRE GARANTIE EXPRESSE OU IMPLICITE, DE QUELQUE NATURE QUE CE SOIT, Y COMPRIS SANS RESTRICTION LES GARANTIES RELATIVES À LA QUALITÉ MARCHANDE ET L'APTITUDE À UN USAGE PARTICULIER.

7. RESPONSABILITÉ ET INDEMNITÉ L'Acheteur reconnaît avoir été informé par le Vendeur des méthodes sécuritaires de transport et de manutention des Bouteilles et accepte par les présentes d'exonérer le Vendeur de toute responsabilité découlant ou pouvant résulter de sa décision de transporter ou manipuler les Bouteilles de façon non conforme auxdites méthodes et/ou dérogeant aux lois applicables. Le Vendeur rejettera toute réclamation pour une perte de contenu due à des robinets défectueux ou à d'autres défauts des Bouteilles, à moins que ces réclamations ne soient formulées dans les dix (10) jours suivant la réception des Bouteilles en cause par l'Acheteur et que les Bouteilles ne soient retournées au Vendeur dans les dix (10) jours avec une étiquette indiquant la nature du défaut. Sujet à la limitation prévue à la section 6, chaque partie consent à indemniser et à mettre à couvert l'autre partie de toute réclamation et demande de toute nature, pour des pertes ou dommages matériels ou blessures corporelles, causés en tout temps et directement par sa négligence, ses actes ou omissions ou ceux de ses employés et mandataires. Aucune partie ne sera responsable vis-à-vis de l'autre des dommages particuliers, indirects ou consécutifs quelle qu'en soit la cause.

8. SÉCURITÉ L'Acheteur reconnaît que les Biens sont des produits dangereux au sens de la Loi sur Les Produits Dangereux, et que l'usage de ces Biens en milieu de travail est régie par la Loi et les Règlements sur la Santé et Sécurité au Travail. L'Acheteur reconnaît que la manipulation, le transport, la présence, l'entreposage et l'utilisation des Bouteilles et des Biens qu'elles contiennent présentent des risques. L'Acheteur déclare en outre par les présentes qu'il a une bonne connaissance de toutes les méthodes, directives et règlements de sécurité nécessaires et/ou applicables dans ce domaine et qu'il s'y conformera. L'Acheteur s'engage à assurer la formation de ses employés en ce qui concerne la manipulation, le transport, la présence, l'entreposage et l'utilisation des Bouteilles et des Biens qu'elles contiennent et à protéger ses employés et les tiers ainsi que ses biens et ceux d'autrui exposés à de tels risques. L'Acheteur reconnaît avoir reçu du Vendeur les fiches signalétiques appropriées. L'Acheteur comprend que les Biens et les Bouteilles ne doivent pas être utilisés sans consulter au préalable les fiches signalétiques. L'Acheteur devra s'assurer que ses employés ou toutes autres personnes pouvant être exposées aux Biens ont reçu et pris connaissance d'une copie des fiches signalétiques.

9. RÉSERVE DE PROPRIÉTÉ Le Vendeur accepte de vendre à l'Acheteur, qui accepte d'acheter du Vendeur, le (les) Bien(s) énoncé(s) aux présentes, par laquelle le Vendeur retient un droit de propriété sur le (les) Bien(s) jusqu'à parfait paiement et sujet aux dispositions incluses aux présentes. Tous les risques de perte, de vol ou de dommage au(x) Bien(s) étant toutefois transférés à l'Acheteur à la prise de possession du (des) Bien(s).

10. UTILISATION LA VENTE ET L'UTILISATION DES BIENS SONT DESTINÉES UNIQUEMENT À DES FINS COMMERCIALES OU INDUSTRIELLES LES BIENS SONT DESTINÉS À ÊTRE UTILISÉS PAR DES PRÉPOSÉS QUALIFIÉS ET EXPÉRIMENTÉS DANS L'UTILISATION ET, L'ENTRETIEN DE L'ÉQUIPEMENT DE SOUDAGE ET DE GAZ INDUSTRIELS, MÉDICAUX ET SPÉCIAUX. Sous réserve de l'autorisation écrite du Vendeur, les Biens ne seront pas revendus par l'Acheteur à des consommateurs, au sens de la Loi, ni utilisés par ces derniers. Les garanties du Vendeur ne s'étendent pas aux consommateurs et ne peuvent lui être transmises par l'Acheteur.

11. SUCCESSEURS Cette Entente doit se réaliser à l'avantage des successeurs et cessionnaires respectifs des parties aux présentes et lier ceux-ci. L'Acheteur n'a pas le droit de céder la présente Entente sans le consentement préalable et par écrit du vendeur.

12. MODIFICATIONS Toutes les dispositions de cette Entente y sont incluses. Toutes les autres modalités énoncées dans les bons de commande émis ou acceptés en vertu de la présente sont considérées comme nulles et non avenues. Cette Entente ne sera pas modifiée, à moins d'un avis écrit à cet effet signé par un représentant dûment autorisés des deux (2) parties aux présentes.

13. RENONCIATION Le défaut de l'une des parties d'exiger l'exécution par l'autre partie de toute obligation ne sera pas considérée comme une renonciation en cas de violation ultérieure de cette disposition ou comme une renonciation à la disposition elle-même.

14. DISPOSITIONS GÉNÉRALES Si une disposition de la présente Entente devenait sans effet ou non exécutoire, elle sera considérée comme dissociée de la présente Entente sans aucunement invalider le reste de ladite Entente. Cette entente est assujettie aux lois de la province où le Point de consommation de l'Acheteur est situé.

AERO Design Ltd.
2013 - 39th Avenue N.E.
Calgary, Alberta, T2E 6R7
Phone: (403) 250-8027
Fax: (403) 250-8333

Purchase Order

P.O. Number	**11014**
Date	25-Jan-11

Vendor:	
Name:	Bandy Machining
Address:	3420 N. San Fernando Blvd. Burbank, CA, 91504
Phone:	818-846-9020
Fax:	818-846-0621
Attention:	Nicole Green
Currency:	USD

Ship To:	
Name:	AERO Design Ltd.
Address:	2013 - 39th Avenue N.E. Calgary, Alberta, T2E 6R7
Phone:	(403) 250-8027
Fax:	(403) 250-8333
Attention:	Jeff Clarke

ITEM	DESCRIPTION	QTY	RATE	AMOUNT
1	Hinge MS20001P4 144" long FOB: Burbank, CA Call for shipping instructions when ready Payment by credit card	50	74.00	3,700.00
		Subtotal		3,700.00
	Sales Tax		0.00%	0.00
		Total	**USD**	**$3,700.00**

***AERO* DESIGN LTD.**
2013 – 39th Ave N. E., Calgary, Alberta, T2E 6R7 www.aerodesign.ca

F A X C O V E R S H E E T

FAXED

DATE:	January 25, 2011	**TIME:**	~~1:11~~ 3:30 PM
TO:	**Nicole Green**	**PHONE:**	818-846-9020
	Bandy Machining	**FAX:**	818-846-0621
FROM:	J. Clarke Aero Design Ltd.	**PHONE:** **FAX:**	403-250-8027 403-250-8333

Number of pages including cover sheet: 2

RE: ORDER

Nicole,

Please find attached a purchase order for the hinge you quoted on.

It looks like we paid by credit card last time, when the order was ready. Please let me know if you need the # sooner.

Thanks,

Jeff Clarke.

Jeff

Jessica x170

AERO DESIGN LTD.
2013 – 39th Ave N. E., Calgary, Alberta, T2E 6R7 www.aerodesign.ca

FAX COVER SHEET

DATE:	January 20, 2011	TIME:	9:42 AM
TO:	Nicole Green / Sales	PHONE:	818-846-9020
	Bandy Machining	FAX:	818-846-0621
FROM:	Jeff Clarke Aero Design Ltd.	PHONE: FAX:	403-250-8027 403-250-8333

Number of pages including cover sheet: 1

RE: REQUEST FOR QUOTE

Nicole,

Please provide a quote for the following:

Description	Length	Qty	Price (each)
MS20001-P4 Hinge	144" long	50 pcs.	$ 74.00 ea

8-10 wks ARO

We purchased the same from you in November 2008.

Please let me know if you have any questions.

Thanks,

Jeff Clarke

Jeff Clarke.

PO 11014

Hello Jeff,

Thank you for the inquiry. I will like you to continue to order parts from Bandy. The price will remain the same..

FOB: BURBANK
VALIDITY: 60 days
TERMS: COD CIA CC
CREDIT CARD ACCEPTED
MS LINE ITEM MINIMUM: $750.00
P/N LINE ITEM MINIMUM: $3500.00
MFR. C.O.C. – INCLUDED
TEST REPORTS: $150.00 PER PART NUMBER
FAI REPORT: $350.00 PER PART NUMBER
P.O. MUST INCLUDE DWG. REV.
P.O. MUST HAVE FREIGHT ACCT. #
BUYER IS RESPONSIBLE FOR EXPORT LICENSE & PMA

Due to market uncertainty, some distributors and suppliers of material, hardware, and outside processes may hold reduced inventory. Price and delivery information used by Bandy in quote preparation that is "subject to prior sale" will be verified at the time of PO placement. Price and delivery are subject to change at that time.

***AERO* DESIGN LTD.**
2013 – 39th Ave N. E., Calgary, Alberta, T2E 6R7 www.aerodesign.ca

F A X C O V E R S H E E T

FAXED
20 JAN 2011
9:45AM

DATE:	January 20, 2011	**TIME:**	9:42 AM
TO:	**Nicole Green / Sales**	**PHONE:**	818-846-9020
	Bandy Machining	**FAX:**	818-846-0621
FROM:	Jeff Clarke Aero Design Ltd.	**PHONE:** **FAX:**	403-250-8027 403-250-8333

Number of pages including cover sheet: 1

RE: REQUEST FOR QUOTE

Nicole,

Please provide a quote for the following:

Description	Length	Qty	Price (each)
MS20001-P4 Hinge	144" long	50 pcs.	

We purchased the same from you in November 2008.

Please let me know if you have any questions.

Thanks,

Jeff Clarke

Jeff Clarke

GKN AEROSPACE

BANDY MACHINING, INC.

SHIPPER

GKN AEROSPACE BANDY MACHINING, INC.

RETURNS:

3086 N. Avon St.
Burbank, CA 91510 USA
T (818) 846-9020
F (818) 846-0621

CERTIFICATE OF CONFORMANCE

Materials and/or parts furnished on this order have been manufactured in accordance with applicable instructions and specifications. Physical and chemical data requirements pertaining to this order are on file and avilable for your inspection. Data is kept on file per procedure EXE-4.2.4-01 of Bandy's Quality System or per your purchase order, whichever is greater. All materials, parts or components of assemblies have been inspected and comply with the purchase order requirements. All special processing and special instructions necessary for the completion of this order have been performed within this facility or by approved subcontractors. If customer furnished materials are required on this order, no substitutions have been made without prior authorization.

Packing list number 55642

Page 1
3/25/11 10:52:40

Shipped from:
Company . . . : 1 GKN BANDY
Warehouse . . : 1

Ship Date . . . : 3/25/11
Shipment number : 128560
Control number : 0

Ship to . : AERO DESIGN LTD
2013-39TH AVENUE N.E.
CALGARY AB T2E 6R7
CANADA

Carrier/pro number	Truck/trailer number	Gross weight	U/M
			LB

Shipping instructions : SEE NICOLE

Items not assigned to containers

Order information:
CO 108337 1/28/11 10106510 AERO DESIGN LTD
P.O. information:
11014 Date . : 1/25/11
Transport terms . . . . . : Cash In Advance
Shipping instructions . . : SEE NICOLE

PICK LIST # 59451

Lot Number: **M978440 (15209)**
PIN: **15675**

Item number	Rel	Item description	Packed qty/ Backorder qty	U/M U/M
MS20001-P4	1	HINGE ASSY	50.000	EA
1			.000	EA

SAME AS:
MS20001P4-14400
REVISION N

** End of Packing List **

GKN QA 222

CERTIFICATE OF CONFORMANCE

QUALITY ASSURANCE 3/25/2011

CONNELL
Processing, Inc.
3080 NORTH AVON ST. BURBANK, CA 91504
818 845-7661 FAX: 818 845-8083

CERTIFICATION

1103241A

SOLD TO:
10211000
*GKN AEROSPACE-BANDY MACHINING**
c/o ACCOUNTS PAYABLE
P.O. BOX 7716
BURBANK, CA 91510
(818)846-9020 Fax (818)846-0621
RESALE #:
SRAC 13-616995

SHIP TO:
GKN AEROSPACE-BANDY MACHINING
3086 N. AVON STREET
BURBANK, CA 91504
(818)846-9020 Fax (818)846-0621

Date Received	Purchase Order	Job Number	Date Shipped	Part1/Comp
3/16/11	P403469-00		3/21/11	X

Order Qty	Rec'd Qty	Description		Accepted	Rejected
100	100	MS20001-P4 144"	M978440-1600	100	

PROCESSES PERFORMED:

CLEAN & SULFURIC ACID ANODIZE / MIL-A-8625F(1) TY II CL 1 HOT WAT SEAL
COATING THICKNESS: 0.00025"

NOTES:

RECEIVED
MAR 21 2011
GKN QA 235
GKN AEROSPACE
BANDY MACHINING, INC.

We hereby certify that the above listed parts have been processed accordance with applicable specifications.
****
* *Discrepancies must be reported within** SIGNED BY:
* *10 days of receipt of parts* *
****

CONNELL PROCESSING, INC.
AUGUSTIN C. PAK, QC INSPECTOR

CPI
QC

UNIVERSAL ALLOY CORPORATION
2871 La Mesa Ave.
Anaheim,CA 92816-6316
(800) 331-7772 FAX: (714) 630-7207

Universal Alloy Corporation

Shipper Number **140896**

Customer PO 402651 IT 1

Part Number BMI4400-2024 REV N/C

Terms NET 45

FOB DESTINATION

Alloy 2024 **Temper** T3511

Ship Date January 25,2011

Sold To:
GKN AEROSPACE BANDY
P.O. BOX 7716
BURBANK,CA 91510

Ship To:
GKN AEROSPACE BANDY
3086 N. AVON ST.

BURBANK,CA 91504

Material	Description	Req.'d Date	Order Date	Quantity (Pcs)	Length	Packages	Net Weight	Gross Weight	Packed By	Release No
49241	ALUMINUM LINEAL EXTRUSION LOT(S) A463868	01/25/11	01/24/11	100	146.00	1	191.00	197.00	12	188003
		01/25/11	01/24/11	100	146.00	1	191.00	197.00	12	188003
			Totals	**200**	**2,433.33 Ft.**	**2**	**382.00 lbs**	**394.00 lbs**		

Note:

Received By:

WAREHOUSE REC'D.
REL: _____
QTY: 200
LOC: WW 40F
B/L: 15209 146"
RD: ✓ DATE: 1/28 SIGN: JV.

RECEIVED
JAN 29 2011
GKN QA 229
GKN AEROSPACE
BANDY MACHINING, INC.

UNIVERSAL ALLOY CORPORATION

2871 LA MESA AVE. ANAHEIM, CA 92806 (714) 630-7200

EXTRUSION MILL CERTIFICATE OF CONFORMANCE
INSPECTION AND TEST REPORT

CUSTOMER GKN AEROSPACE BANDY

PURCHASE ORDER 402651 IT 1 ✓ **DATE** 08/27/10

ORDER NUMBER 188003 **PART NO.** BMI4400-2024 rev N/C 49241 ✓

SPECIFICATIONS AMS-QQ-A-200/3 REV. NC ✓ **MATERIAL** 2024-T3511 ✓

MECHANICAL PROPERTIES

SAMPLE OR LOT	TEST DIR	TENSILE STRENGTH PSI	YIELD STRENGTH PSI	ELONGATION %
A463868 ✓	L	60,600	46,700	23.5

REF. UAC # 49241

RECEIVED
JAN 29 2011
GKN QA 229
GKN AEROSPACE
BANDY MACHINING, INC.

75.0 - 76.0 HRBW 29.5 - 30.0% IACS

MANUFACTURED IN THE U.S.A.

CHEMICAL COMPOSITION LIMITS											
ALLOY NOS	SI	FE	CU	MN	MG	CR	ZN	TI	EACH	OTHERS	TOTAL
2024	0.50	0.50	3.8-4.9	0.30-0.9	1.2-1.8	0.10	0.25	0.15	0.05		0.15

THIS IS TO CERTIFY THAT THE MATERIAL APPLIED TO THE ABOVE ORDER COVERED BY THIS REPORT HAS BEEN INSPECTED IN ACCORDANCE WITH THE SPECIFICATIONS DESCRIBED FORMING A PART OF THIS ORDER AND THAT REPRESENTATIVE MATERIAL HAS BEEN TESTED AND FOUND TO MEET THE APPLICABLE REQUIREMENTS. FURTHER SHOWN ARE THE COMPOSITION LIMITS AND MECHANICAL PROPERTY TEST RESULTS. DOCUMENTATION VERIFYING CONFORMANCE TO THESE REQUIREMENTS IS ON FILE AND SUBJECT TO EXAMINATION.

PERCENT MAXIMUM UNLESS SHOWN OTHERWISE
REMAINDER ALUMINUM

UNIVERSAL ALLOY CORPORATION

Ricardo Gallegos - Quality Engineer Manager
QUALITY ASSURANCE DEPARTMENT

140896T06

CERTIFICATE OF CONFORMANCE

LaDeau
MANUFACTURING CORPORATION

ISO 9001:2008 CERTIFIED
TÜV-USA Quality Systems

637 West Colorado Street, Glendale, California 91204
Tel: 818-240-3990 Fax: 818-240-1219
email: ladeaumfg@gmail.com

DATE
MAR 18, 2011

BILL TO
GKN AEROSPACE-BANDY MACHINING
ACCOUNTS PAYABLE
POST OFFICE BOX 7716
BURBANK,CA91510

CONSIGNED TO AND DESTINATION
GKN AEROSPACE BANDY MACHINING
SHIPPING/RECEIVING
3086 N AVON STREET
BURBANK, CA 91510

ROUTE WILL CALL

PURCHASE ORDER # P402454-00 ✓

QUANTITY	DESCRIPTION
530	MS20253 P2-14400 ✓
	REF: <<< GKN-BANDY P/N >>>
1	CHEM & PHYS CERT
	M/S 20253-G-WP2-1
	WAREHOUSE REC'D.
	REL:
	QTY: 530
	LOC: WW06H
	B/L: 15675
	RD: ✓ DATE: 3/21 SIGN: D.V.
	TOTAL >>

SHIPPER NO.: A- 34665

301138 ✓

IMPORTANT:
SHIPPER NOT RESPONSIBLE FOR DISCREPANCIES UNLESS REPORTED WITHIN 15 DAYS OF RECEIPT

RECEIVED BY:
RECEIVED
GKN QA 229
MAR 22 2011
GKN QA 229
GKN AEROSPACE
BANDY MACHINING, INC.

LOT # C 65583,C 65584,

03/18/11
AUTHORIZED AGENT

MAKE-UP ☑
STOCK ☐
FORM 4 15-1 7/99

LaDeau mfg. confirms that all materials furnished hereby are represented to conform to the drawings and/or specification detailed on the purchase. Test reports covering the material used in the manufacture of these items are on file and indicate conformance with applicable specification requirements. These reports are available for review.

Vanessa J. Conway Q.A. Manager

WAREHOUSE REC'D.
REL:
QTY: 530
LOC:
B/L: 15675 144
RD: ✓ DATE: 3/21/11 SIGN: D.V.

LaDeau
MANUFACTURING CORPORATION
PO#: P402454-00
P/N: MS20253-P2-14400
SHIPPER: A-34665 ✓
DATE: 03-18-11
LOT#: 65583

RECEIVED
GKN QA 229
MAR 22 2011
GKN AEROSPACE
BANDY MACHINING, IN

Industrial Steel & Wire Co.

12906 TELEGRAPH SANTA FE SPGS, CA 90670 562/320-0540

MATERIAL CERTIFICATION

074127-00 01/06/11
PAGE 1

SOLD TO
LA DEAU MFG. COMPANY
637 W. COLORADO STREET
GLENDALE CA 91209

SHIP TO
LA DEAU MFG. COMPANY
637 W. COLORADO STREET
GLENDALE CA 91209

CUSTOMER P.O. NO. G23339

CUSTOMER NO. L0590

SHIP TO NO. L0590

0880SSBT .0880"302 STAINL SPEC DIA N/M CNT CLS MERCURY FREE

NET WEIGHT	HEAT	TENSIL P.S.I.
3180	7LE5	252167
		252167

C	Mn	P	S	Si	Cr	Ni	N
.066	1.070	.026	.001	.370	18.260	8.010	.071

Mo	Cu						
.220	.330	.000	.000	.000	.000	.000	.000

** MERCURY FREE

ROCKWELL #1 ROCKWELL #2 YIELD-STRENGTH ELONGATION REDUCTION
000000/000000

BRINELL/KNOOP BENDS GRAINS (OS) CNT SALT HRS TORSION H-TARIFF NAFTA
7223.00 B

*** SPECIFICATIONS ***

ASTM A313-10
AMS 5688-L
SAE J230-94

MELT: US UNITED STATES
ORIG: US UNITED STATES
MILL: INDUSTRIAL ALLOYS
DFAR: Y
ROHS: Y

[33501061114571]

REBECCA HAGEMAN
TECHNICAL DATA MANAGER
INDUSTRIAL STEEL & WIRE CO.

*** THE WIRE LISTED ON THIS CERTIFICATION MEETS ALL SPECIFICATIONS INDICATED

WAREHOUSE REC'D.
REL: 530
QTY:
LOC:
B/L: 15676 144
RD: ✓ DATE: 3/21/11 SIGN:

LaDeau MANUFACTURING CORPORATION
PO#: 144100
P/N: MS20233-PE-
SHIPPER: 4-34665
DATE: 03-18-11
LOT#: 65583

RECEIVED
MAR 22 2011
GKN AEROSPACE
BANDY MACHINING, IN

PACKING SLIP

LaDeau
MANUFACTURING CORPORATION

ISO 9001:2008 CERTIFIED
TÜV-USA Quality Systems

637 West Colorado Street, Glendale, California 91204
Tel: 818-240-3990 Fax: 818-240-1219
email: ladeaumfg@gmail.com

DATE
MAR 18, 2011

BILL TO
GKN AEROSPACE-BANDY MACHINING
ACCOUNTS PAYABLE
POST OFFICE BOX 7716
BURBANK,CA91510

CONSIGNED TO AND DESTINATION
GKN AEROSPACE BANDY MACHINING
SHIPPING/RECEIVING
3086 N AVON STREET
BURBANK, CA 91510

ROUTE: WILL CALL

PURCHASE ORDER #: P402454-00 ✓

QUANTITY	DESCRIPTION	UNIT	AMOUNT
530	MS20253 P2-14400 ✓	6.812	3,610.36
	REF: <<< GKN-BANDY P/N >>>		
1	CHEM & PHYS CERT	25.000	25.00
	M/S 20253-GWP2-1 ✓		
	TOTAL >>		3,635.36

SHIPPER NO.: **A- 34665**

301138 ✓

IMPORTANT:
SHIPPER NOT RESPONSIBLE FOR DISCREPANCIES UNLESS REPORTED WITHIN 15 DAYS OF RECEIPT

RECEIVED BY:

PACKING LIST

LOT #
C 65583,C 65584,
✓

03/18/11

AUTHORIZED AGENT

MAKE-UP ☑
STOCK ☐

FORM 4 15-1 7/99

SHIPPED FROM: LaDeau Manufacturing Corporation, 637 West Colorado Street, Glendale, CA 91204 Tel: (818) 240-3990

No. 96135

FINE QUALITY METAL FINISHING, INC.

1640 DAISY AVE., LONG BEACH, CA 90813 · 562-432-2248 · 562-432-0722 · FAX 562-432-7146
FINEQUALITYMETALFINISHING.COM

SOLD TO	SHIP TO
LA DEAU MANUFACTURING CORPORATION 637 WEST COLORADO ST GLENDALE, CA 91204 ~~818-240-3990~~	

DATE ENTERED	SHIPPING NO.	P.O. NO.	CERT. DATE	B/O FROM
03/14/11	96135	G23560		

ITEM	QUANTITY ORDERED	DESCRIPTION	QUANTITY SHIPPED
1	530 ✓	MS20253-P2-14400 Mat: STAINLESS STEEL 089 X 14400 JOB# 65583	
2	500	MS20253-P2-14400 Mat: STAINLESS STEEL 089 X 14400 JOB# 65585	
3	20	MS20253-P2-14400 Mat: STAINLESS STEEL 089 X 14400	

ITEM — PROCESS

LaDeau MANUFACTURING CORPORATION
PO#: P102454-00
P/N: MS20253-P2-14400
SHIPPER: A34665
DATE: 03-18-11
LOT#: 65583 ✓

Continues on the next page.

RECEIVED
MAR 22 2011
GKN QA 229
GKN AEROSPACE
BANDY MACHINING, INC.

Certification: Fine Quality Metal Finishing Inc., hereby certifies that the above hardware was processed in accordance with and conforms to the applicable specifications.

QC INSPECTOR

PARTS RECEIVED IN GOOD ORDER BY

3-18-11
CERTIFICATION DATE

03-18-11
DATE RECEIVED

Accredited Nadcap™
Aerospace Quality System AC7004

PLEASE DATE AND SIGN ABOVE

Claims for shortages, rejections or other discrepancies must be made within five days or responsibility therefore will not be accepted. Our liability for any cause is limited to the cost of direct labor and material of the product directly damaged by our processing or three times our processing charges on such material, whichever is the lesser. Charges for our services are based on this Policy limiting our liability.

CERTIFICATION

No. 96135

FINE QUALITY METAL FINISHING, INC.

1640 DAISY AVE., LONG BEACH, CA 90813 · 562-432-2248 · 562-432-0722 · FAX 562-432-7146
FINEQUALITYMETALFINISHING.COM

SOLD TO	SHIP TO
LA DEAU MANUFACTURING CORPORATION 637 WEST COLORADO ST GLENDALE, CA 91204 818-240-3990	

DATE ENTERED	SHIPPING NO.	P.O. NO.	CERT. DATE	B/O FROM
03/14/11	96135	G23560	37871	

ITEM	QUANTITY ORDERED	DESCRIPTION	QUANTITY SHIPPED
7	27	PINS JOB# 66029 MS20253-P2-1100 Mat: STAINLESS STEEL 089 X 1100 JOB# 66175	

ITEM	PROCESS
	NICKEL STRIKE CADMIUM PLATE PER AMS-QQ-P-416 REV. C TYPE II CL 2 .0003-.0006

✓

RECEIVED
MAR 22 2011
GKN QA 229
GKN AEROSPACE
BANDY MACHINING, INC.

LaDeau
MANUFACTURING CORPORATION
PO#: P4102454-00
P/N: MS 20253-P2-14400
SHIPPER: 1334665
DATE: 03-18-11
LOT#: 65583

Certification: Fine Quality Metal Finishing Inc., hereby certifies that the above hardware was processed in accordance with and conforms to the applicable specifications.

QC INSPECTOR

PARTS RECEIVED IN GOOD ORDER BY

37871
CERTIFICATION DATE

03-18-11
DATE RECEIVED

Accredited Nadcap™
Aerospace Quality System AC7004

PLEASE DATE AND SIGN ABOVE

Claims for shortages, rejections or other discrepancies must be made within five days or responsibility therefore will not be accepted. Our liability for any cause is limited to the cost of direct labor and material of the product directly damaged by our processing or three times our processing charges on such material, whichever is the lesser. Charges for our services are based on this Policy limiting our liability.

CERTIFICATION

GKN AEROSPACE

BANDY MACHINING, INC.

SHIPPER

GKN AEROSPACE BANDY MACHINING, INC.

RETURNS:

3086 N. Avon St.
Burbank, CA 91510 USA
T (818) 846-9020
F (818) 846-0621

CERTIFICATE OF CONFORMANCE

Materials and/or parts furnished on this order have been manufactured in accordance with applicable instructions and specifications. Physical and chemical data requirements pertaining to this order are on file and avilable for your inspection. Data is kept on file per procedure EXE-4.2.4-01 of Bandy's Quality System or per your purchase order, whichever is greater. All materials, parts or components of assemblies have been inspected and comply with the purchase order requirements. All special processing and special instructions necessary for the completion of this order have been performed within this facility or by approved subcontractors. If customer furnished materials are required on this order, no substitutions have been made without prior authorization.

Packing list number 55642

Page 1
3/25/11 10:52:40

Shipped from:
Company . . . : 1 GKN BANDY
Warehouse . . : 1

Ship Date . . . : 3/25/11
Shipment number : 128560
Control number : 0

Ship to . : AERO DESIGN LTD
2013-39TH AVENUE N.E.
CALGARY AB T2E 6R7
CANADA

YRC SHIPMENT STATUS
CALL 1-800-610-6500
111-929422-1

Carrier/pro number	Truck/trailer number	Gross weight	U/M
			LB

Shipping instructions : SEE NICOLE

Items not assigned to containers

Order information:
CO 108337 1/28/11 10106510 AERO DESIGN LTD
P.O. information:
11014 Date . : 1/25/11
Transport terms . . . . . : Cash In Advance
Shipping instructions . . : SEE NICOLE

PICK LIST # 59451

Lot Number: **M978440 (15209)**
PIN: **15675**

Item number	Rel	Item description	Packed qty/ Backorder qty	U/M U/M
MS20001-P4	1	HINGE ASSY	50.000	EA
1			.000	EA

SAME AS:
MS20001P4-14400
REVISION N

** End of Packing List **

GKN QA 222

PACKING SLIP

QUALITY ASSURANCE 3/25/2011

OP-097 08/07

Web straight bill of lading—original—not negotiable

For shipment information, visit yrc.com or call 1-800-610-6500

YRC and Roadway

Thank you for using YRC (RDWY)!

Date: MARCH 29 2011 B/L number: PRO Number:

Shipper number: (818) 846-9020	Trailer number:
Shipper name: GKN Bandy Machining ATT;Nicole Green	
Address: 3420 North San Fernando Boulevard	
City: Burbank	State: CA USA / ZIP code: 91504
Origin city *(if different than before)*:	State: / ZIP code:

Consignee name and address: Aero Design Ltd.		
2013 - 39th Avenue NE		
Att : Steve		
Destination City: Calgary	State: AB CA	ZIP Code: T2E 6R7
Phone Number: 403) 250-8027		

Invoicee: Agility Logisitics ACC# 6267634 att: Vett		
Address: 2323 32nd Ave NE , Suite 250		
REF# 70503002P4		
City: Calgary	State: AB CA	ZIP code: T2E 6Z3

Customer number:	Store number:	Department:
P.O. Number:		
Special instructions:		

Expedited & Guaranteed Precision Services (select one of the services below) — Clear services and COD info

Contact Name: Contact Phone:

Expedited Precision	Date	Time		Proactive Notification
[X] YRC Time-Critical (Guaranteed)	Deliver by: April 4 2011	[ ] By noon:	[X] By 5 p.m. or end of business day:	included
[ ] YRC Time-Critical Window (Guaranteed)	Deliver by:	Between:	& a.m./p.m.	included
[ ] YRC Time-Advantage	Deliver by:	[ ] By noon:	[ ] By 5 p.m. or end of business day:	[ ] nominal fee
[ ] YRC Time-Advantage Deferred	3 to 5 days			[ ] nominal fee

Guaranteed Precision	Date	Time		Proactive Notification
[ ] Guaranteed AM or PM	Standard Service	[ ] By noon:	[ ] By 5 p.m. or end of business day:	[ ] nominal fee
[ ] Guaranteed Multi-Day Window	Between: &		[ ] By 5 p.m. or end of business day:	[ ] nominal fee

All shipments are subject to individual pricing programs as published by YRC or by written transportation contracts.
Expedited & Guaranteed Precision service requests outside 9 a.m. to 5 p.m. Monday–Friday require a quote. Quote ID: 972921do

COD fee: Prepaid [X] Collect [ ] **COD amount: $** **Customer check OK for COD amount?** Yes [ ] No [ ]

No. shipping units	Pkg type	No. Pcs.	Unit of meas.	H/M	Description of articles, special marks and exceptions	NMFC Item no.	Class	Weight (lb) *Subject to correction*	Shipment dimensions Length	Width	Height
1	pcs				Aircraft Hinge		200	90 lbs	151"	4"	4"
					CUSTOMS CLEARANCE BY AGILITY VANCOUVER						
					604-270-7582						

Hazardous materials emergency contact number:

Shipment charges are prepaid unless marked collect: Prepaid [X] Collect [ ]

Total charges: $

NOTE (1) Where the rate depends on value, shippers must state specifically in writing the agreed or declared value of the property as follows:
The agreed or declared value of the property is hereby specifically stated by the shipper to be not exceeding _____ per _____.

Note: (2) Liability limitation for loss or damage on this shipment may be applicable. See 49 U.S.C. §14706 (c)(1)(A) and (B).

Note (3) Products requiring special or additional care or attention in handling or stowing must be so marked and packaged as to ensure safe transportation with ordinary care. See Sec. 2(e) of NMFC Item 360.

If this shipment is to be delivered to the consignee without recourse on the consignor, the consignor shall sign the following statement:
The carrier may decline to make delivery of this shipment without payment of freight and all other lawful charges.

Signature of consignor

Received subject to individually determined rates or written contracts that have been agreed on in writing between the carrier and shipper, if applicable, otherwise to rates, classifications and rules that have been established by the carrier and are available to the shipper on request.

The property described above is in apparent good order, except as noted (contents and condition of contents of packages unknown), marked, consigned, and destined, as indicated above which said carrier (the word carrier being understood throughout this contract as meaning any person or corporation in possession of the property under the contract) agrees to carry its usual place of delivery of said destination, if on its route, otherwise to deliver to another carrier on the route to said destination.

It is mutually agreed as to each carrier of all or any of said property over all or any portion of said route to destination and as to each party at any time interested in all or any of said property, that every service to be performed hereunder shall be subject to all the conditions not prohibited by law, whether printed or written, herein contained, including the conditions on the back hereof, which are hereby agreed to by the shipper and accepted for himself and his assigns.

I hereby declare that the contents of this consignment are fully and accurately described above by the proper shipping name and are classified, packaged, marked and labeled/placarded and are in all respects in proper condition for transport according to applicable international and national governmental regulations.

Shipper company name: GKN Bandy Machining ATT:	Carrier: YRC	Date: MARCH 29 2(	Trailer loaded by: [ ] Shipper [ ] Driver
			Freight counted by: [ ] Driver: pallets said to contain
Shipper signature:	YRC employee signature:	H/U received:	[ ] Shipper [ ] Driver: Loose pieces / [ ] Driver: pallets containing

Mark "X" in "HM" column for hazardous materials.

Single shipment pickup: [ ]

Printed in U.S.A.

7:37:01
JOB.NO: DOC65_5
MFG.ORDER: M978440

MANUFACTURING ORDER
ORIGINAL

3/07/11
USER.ID: TTURNER
PART: MS20001-P4 MIS
HINGE ASSY
TYPE/CLASS: 1/AS
AIRCRAFT: STD2
MFG QTY: 50

C-108337
P.O. NO. 11014
01-10106510
AERO DESIGN LTD

GKN OE 009

GKN PLA 311 3-7-11

MANUFACTURING INSTRUCTIONS (MIS)

REVISION: "N"
MATERIAL: 2024-T3511.
CONFIGURATION: COMPLETE ASSEMBLY.
FINISH: SULFURIC ACID ANODIZE PER MIL-A-8625, TYPE 2.
IDENTIFICATION: INK STAMP IDENTIFY AT REGULAR INTERVALS ALONG LENGTH OF HINGE SO THAT ANY THREE INCH LENGTH WILL HAVE AT LEAST ONE COMPLETE IDENTIFICATION IN FIGURES NOT LESS THAN .060 INCHES HIGH. DESIGNATION FOR ANODIZING, CHEMICAL SURFACE TREATMENT, HINGE STYLE AND LENGTH SHALL NOT BE INCLUDED IN PART MARKING ATTACH TAGS TO THE HINGES WITH COMPLETE PART NUMBER WHICH SHALL MATCH THE COMPLETE PART NUMBER ON THE HINGE PACKAGING AND SHIPPING DOCUMENTS. TAG REQUIREMENT MAY BE ELIMINATED BY CUSTOMER REQUEST.
SPECIAL REQUIREMENTS: NONE.
*
PART IDENTIFICATION: MS20001-4
TAG IDENTIFICATION (IF REQUIRED): MS20001P4-XXXX (XXXX = LENGTH CODE)

ORDER COMMENTS

PICK LIST #_____

ITEM COMMENTS

3-7-11

SAME AS: MS20001-P4-XXXX REVISION _

144 GKN PC 004

AERO Design Ltd.
2013 - 39th Avenue N.E.
Calgary, Alberta, T2E 6R7
Phone: (403) 250-8027
Fax: (403) 250-8333

Purchase Order

P.O. Number	**11013**
Date	27-Jan-11

Vendor:	
Name:	Thyssen Krupp Materials NA
Address:	19044 - 95A Avenue Surrey BC V4N 4P2
Phone:	604-822-3493 ext. 14020
Fax:	800-926-2600
Attention:	Timothy Skidmore
Currency:	CAD

Ship To:	
Name:	AERO Design Ltd.
Address:	2013 - 39th Avenue N.E. Calgary, Alberta, T2E 6R7
Phone:	(403) 250-8027
Fax:	(403) 250-8333
Attention:	Jeff Clarke

ITEM	DESCRIPTION	QTY	RATE	AMOUNT
1	6061-T6 Aluminum 1" x 4" Extruded Bar, 12' long	2	149.65	299.30
	Fuel Surcharge	1	7.20	7.20
		Subtotal		306.50
	Sales Tax	GST	5.00%	15.33
		Total	**CAD**	**$321.83**

ThyssenKrupp Materials NA
Copper and Brass Sales Division

ThyssenKrupp

ThyssenKrupp Materials NA 19044 95A Avenue, Surrey, BC V4N 4P2

DELIVERY NOTE

AERO DESIGN LTD.
2013 39 AVE NE
CALGARY AB T2E 6R7

DATE:	01/27/2011
DOC. NO:	2401086607*
ORDER NO:	1400707710
YOUR P/O:	11013
CUSTOMER NO:	10016771
Route:	**B8MB9**
CONTACT:	Timothy Skidmore
TEL:	800-926-2600
FAX:	888-926-2600
EMAIL:	timothy.skidmore@thyssenkrupp.com

* please state on all documents

SHIP TO: 2013-39TH AVENUE N.E.
SHIP TO: CALGARY, AB, T2E 6R7

We deliver at your own risk and account in accordance with our general delivery and payment terms.

ITEM	DESCRIPTION	NET QTY1 / QTY2	PACKAGE NO.
0010	ALREC00750	2 PC	1001468702
	6061 - T6511 Aluminum Extruded Rectangular	113 lb	
	1.00000 (+ -.012) X 4.0000 (+ -.034) X 144 Mill Length		
	ASTM B 221|2008 ROHS COMPLIANT SAE AMS-QQ-A-200/8|1997		
	Nominal Chemistry/Act Physical		
	Standard Packaging		
	Customer Order No: 11013		

Tag	Qty	UOM	Vendor	Vend PO	Heat/Lot	PCS
2000235149	2	PC			HK108 970	2

Total Gross Weight **115 lb**

All items, not declared as partial delivery, are final quantities.
Delivery Terms: PPD gem. Incoterms 2000 bestway

CERTIFICATION OF COMPLIANCE

We hereby certify that mercury or any of its compounds are not used in the processing and distribution of our products. The products we distribute are not hazardous in their received state.

For MSDS sheets go to www.copperandbrass.com/msds or call 248-233-5862. We hereby certify that the material above complies with the above specifications

Rush D. Williams - Director Quality Improvement Board

Rush D. Williams

Copper and Brass Sales
22355 W 11 Mile Road
Southfield, MI 48033

FORM: 1002 WORKORDER: 2401086607

COPPER AND BRASS SALES

MATERIAL TYPE

ALUMINIUM ALLOYS

PRODUCT DESIGNATION

1100 1350 3003 3004 3105 5005 5083 5086 5182 5454 6061 6063

"WARNING"

SMALL CHIPS, FINE TURNINGS AND DUST MAY IGNITE READILY. EXPLOSIONPOTENTIAL MAY BE PRESENT WHEN:DUST OR FINES ARE DISPERSED IN THE AIR; FINE, DUST OR MOLTEN ALUMINUMARE IN CONTACT WITH CERTAINMETAL OXIDES; OR, CHIPS, FINES, DUST OR MOLTEN ALUMINUM ARE IN CONTACT WITH WATER OR MOISTURE. KEEP AWAY FROM IGNITION SOURCE. USE EXPLOSION- PROOF VENTILATION. KEEP MATERIAL DRY.

INHALING LARGE AMOUNTS OF COPPER, MAGNESIUM OXIDE, MANGANESE OXIDE, AND ZINC OXIDE FUMES OR DUST MAY CAUSE METAL FUME FEVER WITH FLU-LIKE SYMPTOMS. CHRONIC OVEREXPOUSURE TO COPPER MAY CAUSE THICKENING OF THE SKIN; AND SKIN,TEETH,AND HAIR DISCOLORATION. CHRONIC OVEREXPOUSURE TO MANGANESE DUST CAN CAUSE CENTRAL NERVOUS SYSTEM DAMAGE,SCARRING OF THE LUNGS AND REPRODUCTIVE HARM IN MALES.TARGET ORGAN IS PRIMARILY THE LUNG,BUT REPEATED HIGH EXPOSURE CAN ALSO AFFECT THE LIVER.CHRONIC OVEREXPOSURE TO TIN DUST OR IRON OXIDE DUST/FUME MAY CAUSE LUNG SIDEROSIS.CHRONIC OVEREXPOUSURE TO SILICON DUST CAN CAUSE CHRONIC BRONCHITIS.

THIS PRODUCT ALSO CONTAINS LEAD AND CHROMIUM COMPOUNDS.LEAD IS KNOWN TO CAUSE REPRODUCTIVE TOXICITY AND IS A KNOWN CARCINOGEN.EXPOSURE TO CHROMIUM DUST OR FUME MAY CAUSE METAL FUME FEVER WITH FLU-LIKE SYMPTOMS AND KIDNEY AND KIDNEY AND LIVER DAMAGE.UNDER HIGH TEMPERATURES,HEXAVALENT CHROMIUM MAY BE PRODUCED,IF INTHE INSOLUBLE FORM,IT IS A CONFIRMED HUMAN CARCINOGEN. (CALIFORNIA PROPOSITION 65). IF COATED WITH OIL,MAY CAUSE SKIN IRRITATION/DERMATITIS BY CONTACT. WELDING FUME IS LISTED AS A POSSIBLE CARCINOGENIC TO HUMANS.READ THE ALUMINUM/ALUMINUM ALLOYS MATERIAL SAFETY DATA SHEET(MSDS) ON FILE WITH YOUR EMPLOYER BEFORE WORKING WITH THIS MATERIAL.

*** If processing or recycling produces particulate,use exhaust ventilation or other controls designed to prevent exposure to workers. Examples of such activities include melting, welding,grinding,abrasive sawing,sanding and polishing.Any activity which abrades the surface of this material can generate airborne particulate.Use appropriate NIOSH approved respiratory protection (P95; P100 for lead with, quantitative fit testing required) if exposures exceed the permissible limits.**
*** The Occupational Safety and Health Administration (OSHA) have set mandatory limits on occupational exposures.**
*** Aluminum, in solid form and as contained in finished products presents no special health risk.**
*** Sold for manufacturing purposes only.This product can be recycled; contact your sales representative.**

The Occupational Safety and Health Administration require employers to provide training in the proper use of this product.

For additional information, call or write to Copper and Brass Sales,22355 West Eleven Mile Road, Southfield, MI 48033,telephone248-233-5600, or visit our web site @ www.copperandbrass.com.

KAISER ALUMINUM
FABRICATED PRODUCTS

Best in Class

CERTIFIED TEST REPORT

http://Certs.KaiserAluminum.com

KAISER ALUMINUM
FABRICATED PRODUCTS, LLC
6250 EAST BANDINI BLVD
LOS ANGELES, CA 90040-3168

CUSTOMER PO NUMBER:	CUSTOMER PART NUMBER:	PRODUCT DESCRIPTION:
5400083944-10	ALREC00750	1.000 X 4.000 SC RECT BAR

KAISER ORDER NUMBER:	LINE ITEM:	SHIP DATE:	KAISER LOT NUMBER:	ALLOY:	TEMPER:
5000030	010	11/12/2010	HK108 970	6061	T6511
WEIGHT SHIPPED:	**QUANTITY:**	**B/L NUMBER:**	**DIAM/DAF/THKNS:**	**WIDTH:**	**LENGTH:**
1016.000 LB	18.000 PCS	525836			12.000 FT

SHIP TO:	SOLD TO:
THYSSENKRUPP MATERIALS NA COPPER & BRASS SALES DIVISION 19044 95A AVENUE SURREY, CA CANADA, V4N 4P2 CANADA	COPPER & BRASS SALES PO BOX 5116 SOUTHFIELD, MI 48086-5116 USA

Actual Physical Properties

REFERENCE	DASH#	SAMPLE#	UTS(KSI)	YTS(KSI)	ELONG%	HARDNESS	CONDUCT.	BEND
HK108 970	0001	0001	53.0	44.4	20.0	RE 99	N/A	N/A
HK108 970	0001	0002	52.0	45.8	20.2	RE 97	N/A	N/A

Chemical Composition (wt%), Aluminum Remainder

LIMITS	Si	Fe	Cu	Mn	Mg	Cr	Zn	Ti	Pb	Bi	Zr	Ea	Tot
Maximum	0.8	0.7	0.40	0.15	1.2	0.35	0.25	0.15	NA	NA	NA	0.05	0.15
Minimum	0.40		0.15		0.8	0.04			NA	NA	NA		

Applicable Requirements:

ASTM-B221-08-STENCILED ASME-SB221 1998 SECT II AMS-QQ-A-200/8 UNS#96061 (T6511 also conforms to T6-not applicable to other tempers)

Miscellaneous Notes

MANUFACTURED IN USA MELTED IN USA

CERTIFICATION

Kaiser Aluminum Fabricated Products, LLC hereby certifies that metal shipped under this order has been inspected and tested and found in conformance with applicable specifications forming a part of the description set forth in Kaiser's sales acknowledgement form. Any warranty is limited to that shown on Kaiser's general terms and conditions of sale. Test reports are on file, subject to examination.

Mark Shelley, Quality Manager

Mark Shelley

Plant Serial: 00194029

Kaiser Order Number: 5000030

Line Item: 010

ThyssenKrupp Materials NA
Copper and Brass Sales Division

ThyssenKrupp

QUOTE

ThyssenKrupp Materials NA, 19044 95A Avenue, Surrey, BC V4N 4P2

AERO DESIGN LTD.
2013 39 AVE NE
CALGARY AB T2E 6R7
Canada

TEL: 403-250-8027
FAX: 403-250-8333

DATE: 01/24/2011
QUOTE NO: 1200273057
YOUR INQUIRY:
ATTENTION TO: Steven Fahey
TEL: 403-250-8027
CUSTOMER NO: 10016771
DEPARTMENT: CAN VAN INS 01
CONTACT: Timothy Skidmore
TEL: 800-926-2600
FAX: 888-926-2600
EMAIL: timothy.skidmore@thyssenkrupp.com

Thank you for allowing us to quote on your requirement. Delivery contingent upon date ordered.

Delivery Address
AERO DESIGN LTD., 2013 39 AVE NE, CALGARY, AB T2E 6R7, CANADA
Unloading Point: Unload Point 1

PO 11013

Earliest Delivery Date: **01/27/2011**

ITEM	DESCRIPTION	QTY1 UOM QTY2 UOM QTY3 UOM	PRICE CUR PER UOP	TOTAL CAD
0010	ALREC00750	**2 PC**	**149.65 CAD**	**299.30**
	6061 - T6511 Aluminum Extruded	**112.896 LB**	**1 PC**	
	Rectangular			
	1.00000 (+ -.012) X 4.0000 (+ -.034) X 144			
	Mill Length			
	ASTM B 221|2008 ROHS COMPLIANT SAE			
	AMS-QQ-A-200/8|1997 Nominal			
	Chemistry/Act Physical			
	Standard Packaging			
	Fuel/Energy Surchrg			7.20
	Weight total	112.896 LB		
	Items total			306.50
	Net Amount			**306.50**
	GST			15.33
	TOTAL			**321.83**

Payment Terms: Within 30 days without deduction
Delivery Terms: COL Collect shipment FOB Edmonton
Shipping Condition: General Delivery

COMPUTER GENERATED OFFER AND VALID WITHOUT SIGNATURE.

Copper and Brass Sales
22355 W 11 Mile Road
Southfield, MI 48033

ThyssenKrupp Materials NA
Copper and Brass Sales Division

ThyssenKrupp

ThyssenKrupp Materials NA, 19044 95A Avenue, Surrey, BC, V4N 4P2

AERO DESIGN LTD.
2013 39 AVE NE
CALGARY AB T2E 6R7
Canada

QUOTE

DATE: 01/24/2011
QUOTE NO: 1200273057
YOUR INQUIRY:
ATTENTION TO: Steven Fahey
TEL: 403-250-8027

Please review the above items for accuracy.
Prices are quoted as price in effect at time of shipment.
Our standard terms and conditions apply should this quote become an order.
For terms and conditions please refer to website at **www.copperandbrass.com**
Any obvious damage must be noted on the material delivery documentation at the time of receipt.
Tax exemption status documentation must be forwarded to credit department prior to order approval.
All returned material subject to restock charge

Copper and Brass Sales
22355 W 11 Mile Road
Southfield, MI 48033

AERO Design Ltd.
2013 - 39th Avenue N.E.
Calgary, Alberta, T2E 6R7
Phone: (403) 250-8027
Fax: (403) 250-8333

Purchase Order

P.O. Number	**11012**
Date	20-Jan-11

Vendor:	
Name:	Avio-Diepen
Address:	561 Airport South Parkway Suite 500 Atlanta, Georgia 30349
Phone:	770-996-6430
Fax:	770-996-8430
Attention:	Eric Jackson
Currency:	USD

Ship To:	
Name:	AERO Design Ltd.
Address:	2013 - 39th Avenue N.E. Calgary, Alberta, T2E 6R7
Phone:	(403) 250-8027
Fax:	(403) 250-8333
Attention:	Jeff Clarke

ITEM	DESCRIPTION	QTY	RATE	AMOUNT
1	40088-14 Stud Tiedown (Ancra) (Per your quote by phone, 20 Jan 2011) Ship via UPS account 1016Y4 Signature: _____ (President, Aero Design) Visa # 4520 8480 0178 3252 Exp. 06/11 Charles Edward Burgoin	200	17.91	3,582.00
		Subtotal		3,582.00
	Sales Tax		0.00%	0.00
		Total	**USD**	**$3,582.00**

***AERO* DESIGN LTD.**
2013 – 39th Ave N. E., Calgary, Alberta, T2E 6R7 www.aerodesign.ca

F A X C O V E R S H E E T

FAXED

DATE:	January 25, 2011	**TIME:**	3:36 PM
TO:	**Eric Jackson**	**PHONE:**	770-996-6430
	Avio Diepen	**FAX:**	770-996-8430
FROM:	J. Clarke Aero Design Ltd.	**PHONE:** **FAX:**	403-250-8027 403-250-8333

Number of pages including cover sheet: 2

RE: ORDER

Eric,

Please find attached a purchase order for the Ancra studs I called about last week.

Let me know if you have any questions.

Jeff Clarke

Jeff

AVIO-DIEPEN INC.
561 AIRPORT SOUTH PARKWAY,SUITE 500
ATLANTA, GEORGIA 30349
UNITED STATES
FAX : +1-770-996-8430
SITA: HAGME7X

ORDER CONFIRMATION

Number : 400301 Page 1 of 1
Date : 27 JAN 2011
Contact: Eric Jackson
Phone : +1-770-996-6430

-Ship to-
AERO DESIGN LTD
2013-39TH AVENUE NE
CALGARY ALBERTA T2E 6R7
CANADA

-Sold to-
AERO DESIGN LTD
2013-39TH AVENUE NE
CALGARY ALBERTA T2E 6R7
CANADA

-Marks-
AERO DESIGN LTD
2013-39TH AVENUE NE
CALGARY ALBERTA T2E 6R7
CANADA

Attn : JEFF CLARKE
Fax : +1-403-250-8333
Your Ref : 11012

Payment : VISA/MASTERCARD
Currency : U.S. DOLLAR

Transport: UPS GROUND TRACKING
Prices : EX WORKS ATLANTA
Delivery : EX WORKS ATLANTA

Condition: FACTORY NEW CERTIFIED

Certificates: C.O.C. (ISSUED BY AVIO-DIEPEN)
C.O.C. (ISSUED BY MANUFACTURER)

It.	Partno and description	Quantity	Unit	Unit price	Disc	ShipDate
001	40088-14 STUD TIEDOWN YOUR ITEM: 1	200.0	EACH	17.91	0.0	22-APR-2011

THANK YOU FOR YOUR ORDER
UPS GROUND ACCT #1016Y4
ELJ

Dear Sirs,

We thank you for the above mentioned order and confirm the above items in accordance with our Conditions of Sale.

The delivery conditions refer to the Incoterms 2000.

-Authentication-

Deon Galatas

Eric Jackson

AVIO-DIEPEN INC.
561 AIRPORT SOUTH PARKWAY, SUITE 500
ATLANTA, GEORGIA 30349
UNITED STATES
FAX : +1-770-996-8430
SITA: HAGME7X

EXPORT INVOICE

Number : 486438 Page 1 of 1
Date : 2011-02-16
Contact: Eric Jackson
Phone : +1-770-996-6430

-Consignee-
AERO DESIGN LTD
2013-39TH AVENUE NE
CALGARY ALBERTA T2E 6R7
CANADA 1

-Sold to-
AERO DESIGN LTD
2013-39TH AVENUE NE
CALGARY ALBERTA T2E 6R7
CANADA

-Ship to-
AERO DESIGN LTD
2013-39TH AVENUE NE
CALGARY ALBERTA T2E 6R7
CANADA

Attn : JEFF CLARKE
Your Ref : 11012

Your VATNO :
Our VATno : -
Our orderno : 400301/AER736

Prices : EX WORKS ATLANTA
Delivery : EX WORKS ATLANTA
Customs : Free -
Transport : UPS GROUND TRACKING
Account no : 1016Y4

Criticality : Normal

It.	Partno and description	Quantity	Unit	Unit-price	Disc%	Amount
001	40088-14 STUD TIEDOWN YOUR ITEM: 1 COUNTRY OF ORIGIN: UNITED STATES ECCN CODE: EAR99 SCHEDULE B: 8803300030	68.0	EACH	17.91	0.0	1217.88

USD 1217.88

APPLICABLE TO GOODS SUBJECT TO THE EAR
These commodities, technology or software were exported from the U.S.A. in accordance with the Export Administration Regulations (EAR).
Diversion contrary to U.S. law is prohibited.

This export invoice is issued for transportation and customs purposes only.
DO NOT PAY ON THIS INVOICE
Original invoice will follow.

avio-diepen

KM

AVIO-DIEPEN INC.
561 AIRPORT SOUTH PARKWAY, SUITE 500
ATLANTA, GEORGIA 30349
UNITED STATES
FAX : +1-770-996-8430
SITA: HAGME7X

PACKING LIST

Number : 486438
Date : 2011-02-16
Contact: Eric Jackson
Phone : +1-770-996-6430

-Consignee-
AERO DESIGN LTD
2013-39TH AVENUE NE
CALGARY ALBERTA T2E 6R7
CANADA

-Sold to-
AERO DESIGN LTD
2013-39TH AVENUE NE
CALGARY ALBERTA T2E 6R7
CANADA

-Ship to-
AERO DESIGN LTD
2013-39TH AVENUE NE
CALGARY ALBERTA T2E 6R7
CANADA

Attn : JEFF CLARKE
Your Ref : 11012

Your VATno :
Our VATno : -
Our orderno : 400301/AER736

Prices : EX WORKS ATLANTA
Delivery : EX WORKS ATLANTA
Customs : Free -
Transport : UPS GROUND TRACKING
Account no : 1016Y4

Criticality : Normal

It.	Partnumber / Description	Serialno	Quantity	Unit	RcptNo / Line	Locatn / TchCnd	Certno / Certificate
001	40088-14		68.0	EACH	265972 / 1	8K41 / MAN	706058-1 / CMA
	STUD TIEDOWN						
	YOUR ITEM: 1						
	ECCN CODE: EAR99						CAD
	SCHEDULE B: 8803300030						
	THANK YOU FOR YOUR ORDER						
	UPS GROUND ACCT #1016Y4						
	ELJ						

MB

APPLICABLE TO GOODS SUBJECT TO THE EAR
These commodities, technology or software were exported from the U.S.A. in accordance with the Export Administration Regulations (EAR). Diversion contrary to U.S. law is prohibited

Parts accompanied by a manufacturer's Certificate of Conformity only are not manufactured under any Aviation Authority's approval unless explicitly stated differently on the manufacturer's certificate.

CERTIFICATE OF CONFORMANCE
We herewith certify that the parts listed are in accordance with the purchase order requirements. Certificates are on file and may be reviewed upon request. Only valid when stamped and signed by Q.C. authorized employees of Avio-Diepen, Inc.

Initials: al

Stamp: 0848

avio-diepen

Packinglist : 486438
Date : 16-02-2011


```
###### ###       ## ########### ##########  #########   ###      ##
  ##   #####     ## #    ##    # ##        ##       ## ####     ##
  ##   ##  ###   ##      ##      ##        ##       ## ## ##    ##
  ##   ##    ## ##       ##      ######    #########   ##    ## ##
  ##   ##      ####      ##      ##        ##  ###     ##     ####
  ##   ##       ###      ##      ##        ##   ###    ##      ###
###### ##        ##      ##      ##########  ##     ### ##       ##
```

THIS IS AN ORDER PAID BY CREDIT CARD.
DO NOT RELEASE TO CARRIER UNTIL INFORMED TO DO SO BY FINANCE.

Avio-Diepen B.V.
Tel. :+31-(0)172-449777
Fax :+31-(0)172-449789

Avio-Diepen Inc.
Tel. :+1-770-996-6430
Fax :+1-770-996-8430

Avio-Diepen Hong Kong Ltd.
Tel. :+852-2310-1868
Fax :+852-2310-9638

All deliveries are subject to our **Conditions of Sale**. All our purch[illegible]e subject to our **Conditions of Purchase**. Our **Conditions of Sale** and our **Conditions of Purchase** are available on our website: w[illegible]-diepen.com. Printed conditions are available upon request.

Chamber of Commerce register no. Leiden 28076088

AVIO-DIEPEN INC.
561 AIRPORT SOUTH PARKWAY, SUITE 500
ATLANTA, GEORGIA 30349
UNITED STATES
FAX : +1-770-996-8430
SITA: HAGME7X

EXPORT INVOICE

Number : 486438 Page 1 of 1
Date : 2011-02-16
Contact: Eric Jackson
Phone : +1-770-996-6430

-Consignee-
AERO DESIGN LTD
2013-39TH AVENUE NE
CALGARY ALBERTA T2E 6R7
CANADA 1

-Sold to-
AERO DESIGN LTD
2013-39TH AVENUE NE
CALGARY ALBERTA T2E 6R7
CANADA

-Ship to-
AERO DESIGN LTD
2013-39TH AVENUE NE
CALGARY ALBERTA T2E 6R7
CANADA

Attn : JEFF CLARKE
Your Ref : 11012

Your VATNO :
Our VATno : -
Our orderno : 400301/AER736

Prices : EX WORKS ATLANTA
Delivery : EX WORKS ATLANTA
Customs : Free -
Transport : UPS GROUND TRACKING
Account no : 1016Y4

Criticality : Normal

It.	Partno and description	Quantity	Unit	Unit-price	Disc%	Amount
001	40088-14 STUD TIEDOWN YOUR ITEM: 1 COUNTRY OF ORIGIN: UNITED STATES ECCN CODE: EAR99 SCHEDULE B: 8803300030	68.0	EACH	17.91	0.0	1217.88
					USD	1217.88

APPLICABLE TO GOODS SUBJECT TO THE EAR
These commodities, technology or software were exported from the U.S.A. in accordance with the Export Administration Regulations (EAR).
Diversion contrary to U.S. law is prohibited.

This export invoice is issued for transportation and customs purposes only.
DO NOT PAY ON THIS INVOICE
Original invoice will follow.

ANCRA INTERNATIONAL LLC
4880 West Rosecrans Avenue
Hawthorne, California 90250
Phone: (310) 973-5000 • FAX: (310) 973-1138

Shipping List Number706058-1

Customer Order		Order Date	Page
30068790		02-08-11	1

Ship To: 100706
AVIO-DIEPEN INC.
561 Airport South Parkway
Suite#500
Atlanta, GA 30349

Bill To: 100706
AVIO-DIEPEN INC.
561 Airport South Parkway
Suite#500
Atlanta, GA 30349

Ship Via: FedEx Express Saver Contact : RAY HALL
Ship from: W ANCRA WEST HAWTHORNE Freight Terms : COL

Ord Ent By: rgvillalobos

Ln No	Item Number	Description	Sell UM	Sell Qty Ship	To Stk UM	Bin Loc	Stock Qty To Ship	Shipped Qty/UM
1	40088-14		EA	68	EA	A-34	68	68

Facility W :STUD TIEDOWN
Rev. Level: AA

** Special Instructions **
****
******
FEDEX SAVER ACCT# 1483-7993-9
****
****
AVIO-D PO# NUMBER MUST BE ON BILL OF LADING
==========DO NOT INSURE==========
==========
*** ALL SEAT TRACK PRODUCTS ***
PART MARK TRACK NUMBER WITH STAMP
<<<DO NOT USE EXTRUSION NUMBER>>>
(ALL) HEAT TREAT LOT #S-MUST BE LISTED ON CofC
****
****
FAA 8130-3 AIRWORTHINESS CERT REQUIRED FOR
PN 45387-10

NA

Allocated: 02-09-11
Printed: 02-09-11 09:21:41

THIS IS A TRUE COPY CERTIFIED BY: QC48

FORM CS-7 REV. N/C

ANCRA INTERNATIONAL LLC
4880 West Rosecrans Avenue
Hawthorne, California 90250
Phone: (310) 973-5000 • FAX: (310) 973-1138

Shipping List Number706058-1

Customer Order		Order Date	Page
30068790		02-08-11	2

Ship To: 100706
AVIO-DIEPEN INC.
561 Airport South Parkway
Suite#500
Atlanta, GA 30349

Bill To: 100706
AVIO-DIEPEN INC.
561 Airport South Parkway
Suite#500
Atlanta, GA 30349

Ship Via: FedEx Express Saver Contact : RAY HALL
Ship from: W ANCRA WEST HAWTHORNE Freight Terms : COL
Ord Ent By: gvillalobos

Ln No	Item Number	Description	Sell UM	Sell Qty ....Ship...	To Stk UM	Bin Loc	Stock Qty To Ship	Shipped Qty/UM

CERTIFICATE OF CONFORMANCE

WE HEREBY CERTIFY THAT THE ABOVE STATED PART NUMBERS REPRESENTED ARE NEW AND HAVE BEEN MANUFACTURED AND INSPECTED IN ACCORDANCE WITH OUR QUALITY ASSURANCE MANUAL, ALL RELEVANT DRAWINGS, SPECIFICATIONS, PURCHASE ORDER REQUIREMENTS, AND LEGIBLY MARKED IN ACCORDANCE WITH FAR 45.15, IF APPLICABLE.

AS SUCH, THESE PRODUCTS CONFORM TO CURRENT APPLICABLE AIRWORTHINESS REGULATIONS. ALL CHEMICAL, PHYSICAL OR FUNCTIONAL TEST REPORTS RELEVANT TO THE CERTIFICATION OF CONFORMANCE ARE ON FILE IN OUR QUALITY ASSURANCE OFFICE.

SAUL ZAZUETA

INSPECTOR_____ DATE 2/9/11

Shortage Claim Policy

Ancra customer is responsible for inspecting incoming shipments. Ancra must be notified within fifteen(15) days of receipt of shipment if material is not as ordered, quantity is either surplus or short, or if any damage has occurred in shipment. No claims submitted to Ancra will be accepted after fifteen(15) days of receipt.

THIS IS A TRUE COPY CERTIFIED BY:

Pay Terms NET 30

FORM CS-7 REV. N/C

Canada Trust
EasyWeb

View Accounts

Help

Account Activity

Print this page
Apply for a Credit Line Increase
Add an Authorized User Card

TD FIRST CLASS TRAVEL VISA INFINITE CARD - 4520 8800 1412 1279 $1,965.18 OK

2 statements ago

Balance Date: Apr 16, 2011

Statement Balance was: $9,889.75
Minimum Payment was: $10.00

Payment due date: Mar 11, 2011

Save on interest with a special 4.9% rate!
Transfer your balances to your TD Canada Trust Credit Card today.

Bottom

Posted Date	Description	Debit	Credit	Balance
Feb 18, 2011	ANNUAL FEE	120.00		$9,889.75
Feb 18, 2011	LAIRD PLASTICS SERV 62 CALGARY	1,180.20		$9,769.75
Feb 17, 2011	AVIO-DIEPEN INC 7709966430	3,630.39		$8,589.55
Feb 16, 2011	ROYAL OAK SOBEYS QPS CALGARY	27.29		$4,959.16
Feb 16, 2011	BEAVER MINES GEN STORE PINCHER CR	35.29		$4,931.87
Feb 14, 2011	SWISS ALPINE RESTAURANT PINCHER CR	50.00		$4,896.58
Feb 14, 2011	PETROCAN-64273 HWY 547 E ALDERSYDE	55.29		$4,846.58
Feb 14, 2011	BEAVER MINES GEN STORE PINCHER CR	54.01		$4,791.29
Feb 14, 2011	FERNIE ALPINE RESOSRT TICFERNIE	109.65		$4,737.28
Feb 14, 2011	LONGVIEW HOTEL/TWIN CITIELONGVIEW	33.84		$4,627.63
Feb 14, 2011	SMITTY'S FERNIE	22.96		$4,593.79
Feb 14, 2011	RONA HOME & GARDEN #62860CALGARY	156.29		$4,570.83
Feb 11, 2011	RONA HOME & GARDEN #62850CALGARY	9.20		$4,414.54
Feb 10, 2011	GENERAL PAINT #32 CALGARY	139.14		$4,405.34
Feb 09, 2011	GES*EXHIBITIONS&EVENTS 800-475-20	638.44		$4,266.20
Feb 09, 2011	GES*EXHIBITIONS&EVENTS 800-475-20	490.64		$3,627.76
Feb 08, 2011	SHELL 10855 BONAVENTURE DCALGARY	64.02		$3,137.12
Feb 08, 2011	AIRCRAFT SPRUCE CANADA BRANTFORD	128.89		$3,073.10
Feb 07, 2011	BOATEREXAM.COM OTTAWA	63.00		$2,944.21
Feb 07, 2011	PRINCE SEAFOOD RESTAURANTCALGARY	48.89		$2,881.21
Feb 03, 2011	PETROCAN-11 HIDDEN DR NW CALGARY	59.71		$2,832.32
Feb 03, 2011	CHILI'S TEXAS GRILL CALGARY	58.49		$2,772.61
Feb 03, 2011	MATTHEW BOADI PROF. CORP.CALGARY	155.00		$2,714.12
Feb 01, 2011	BRION TOSS YACHT RIGGERS 360-385-10	1,217.83		$2,559.12
Jan 31, 2011	BOSTON PIZZA #193 EDMONTON	35.03		$1,341.29
Jan 31, 2011	HUSKY CACHE CAR/TRUCK CALGARY	54.75		$1,306.26
Jan 31, 2011	FUTURE SHOP #745 CALGARY	365.39		$1,251.51
Jan 31, 2011	CALGARY TRAIL FAS GAS PLUEDMONTON	42.40		$886.12
Jan 28, 2011	GINGER BEEF PEKING TRAIL CALGARY	60.86		$843.72
Jan 27, 2011	PETROCAN-1731 MOUNTAIN AVCANMORE	41.11		$782.86
Jan 26, 2011	PAYMENT - THANK YOU		1,873.70	$741.75
Jan 26, 2011	PETROCAN-1885 HWY 1 WEST KAMLOOPS	64.00		$2,615.45
Jan 26, 2011	SHELL 1840 TRANS CANADA HREVELSTOKE	33.47		$2,551.45
Jan 26, 2011	TSB SHIPPING PLUS LLC POINT ROBE	26.74		$2,517.98

Canada Trust
EasyWeb

View Accounts

Help

Account Activity

Print this page
Apply for a Credit Line Increase
Add an Authorized User Card

TD FIRST CLASS TRAVEL VISA INFINITE CARD - 4520 8800 1412 1279 $1,965.18 OK

Last statement

Balance Date: Apr 16, 2011

Statement Balance was: $4,001.03
Minimum Payment was: $10.00

Payment due date: Apr 08, 2011

Save on interest with a special 4.9% rate!
Transfer your balances to your TD Canada Trust Credit Card today.

Bottom

Posted Date	Description	Debit	Credit	Balance
Mar 18, 2011	ASSOC.CAB ALLIED LIMO CALGARY	18.00		$4,001.03
Mar 17, 2011	AVIO-DIEPEN INC 7709966430	478.12		$3,983.03
Mar 17, 2011	RONA HOME & GARDEN #62850CALGARY	22.41		$3,504.91
Mar 16, 2011	SHELL 1595 32 AVE NE CALGARY	62.49		$3,482.50
Mar 16, 2011	COMPLETE ELECTRIC MOTO CALGARY	21.00		$3,420.01
Mar 14, 2011	WESTJET CALGARY	555.71		$3,399.01
Mar 14, 2011	SAMMY'S SERVICE ORLANDO	46.11		$2,843.30
Mar 14, 2011	UNITED AIR 0164519820360CHICAGO	50.12		$2,797.19
Mar 14, 2011	EZ RENT A CAR IDR ORLANDO	94.11		$2,747.07
Mar 14, 2011	CLARION HOTELS AND SUI ORLANDO	653.00		$2,652.96
Mar 14, 2011	CLARION HOTELS AND SUI ORLANDO	552.09		$1,999.96
Mar 11, 2011	HEIDELBERG HEIDIS JAZZ CLCOCOA BEAC	38.39		$1,447.87
Mar 11, 2011	POINT ROBERTS MARINA 360-945225	2,607.27		$1,409.48
Mar 10, 2011	DNPS KENNEDY SPACE T TKTGKNNDY SPC	82.10		($1,197.79)
Mar 10, 2011	DENNY'S INC ORLANDO	25.92		($1,279.89)
Mar 09, 2011	HAWAIIAN PLAZA ORLANDO	9.99		($1,305.81)
Mar 09, 2011	RED LOBSTER US00063032 ORLANDO	77.44		($1,315.80)
Mar 08, 2011	UNITED AIR 0164519401490TORONTO	25.00		($1,393.24)
Mar 08, 2011	HILTON THE BISTRO ORLANDO	61.23		($1,418.24)
Mar 07, 2011	PAYMENT - THANK YOU		5,500.00	($1,479.47)
Mar 07, 2011	HAWAIIAN PLAZA ORLANDO	15.27		$4,020.53
Mar 07, 2011	MEARS TRANSPORTATION GROUORLANDO	38.46		$4,005.26
Mar 07, 2011	UNITED AIR 0164519117692TORONTO	23.00		$3,966.80
Mar 04, 2011	SHELL 1595 32 AVE NE CALGARY	67.91		$3,943.80
Mar 04, 2011	ARMCHAIR SAILER INC 206-283-08	298.61		$3,875.89
Mar 02, 2011	PETROCAN-1885 HWY 1 WEST KAMLOOPS	35.98		$3,577.28
Mar 02, 2011	SHELL 1840 TRANS CANADA HREVELSTOKE	30.08		$3,541.30
Mar 02, 2011	MASTER CRAFT BOAT COVERINRICHMOND	2,000.00		$3,511.22
Mar 01, 2011	CHEVRON WATER ST ALDERGROVE	28.09		$1,511.22
Mar 01, 2011	CHEVRON E TRANS CDA/VICA KAMLOOPS	58.92		$1,483.13
Mar 01, 2011	GOLDEN HUSKY TRAVEL GOLDEN	22.77		$1,424.21
Mar 01, 2011	BREWSTERSRESTAURANT POINTROBER	100.16		$1,401.44
Feb 28, 2011	CAN-AM PT ROBERTS	55.06		$1,301.28
Feb 28, 2011	PETROCAN-1417 N TRANS CANGOLDEN	37.08		$1,246.22

avio-diepen

AVIO-DIEPEN INC.
561 AIRPORT SOUTH PARKWAY, SUITE 500
ATLANTA, GEORGIA 30349
UNITED STATES
FAX : +1-770-996-8430
SITA: HAGME7X

PACKING LIST

Number : 493878
Date : 2011-04-18
Contact: Eric Jackson
Phone : +1-770-996-6430

-Consignee-
AERO DESIGN LTD
2013-39TH AVENUE NE
CALGARY ALBERTA T2E 6R7
CANADA

-Sold to-
AERO DESIGN LTD
2013-39TH AVENUE NE
CALGARY ALBERTA T2E 6R7
CANADA

-Ship to-
AERO DESIGN LTD
2013-39TH AVENUE NE
CALGARY ALBERTA T2E 6R7
CANADA

Attn : JEFF CLARKE
Your Ref : 11012

Your VATno :
Our VATno : -
Our orderno : 400301/AER736

Prices : EXW - EX WORKS ATLANTA
Delivery : EXW - EX WORKS ATLANTA
Customs : Free -
Transport : UPS GROUND TRACKING
Account no : 1016Y4

Criticality : Normal

It.	Partnumber / Description	Serialno	Quantity	Unit	RcptNo / Line	Locatn / TchCnd	Certno / Certificate
001	40088-14 STUD TIEDOWN YOUR ITEM: 1 ECCN CODE: EAR99 SCHEDULE B: 8803300030		132.0	EACH	270778 4	21A45 MAN	706058-2 CMA CAD

THANK YOU FOR YOUR ORDER
UPS GROUND ACCT #1016Y4
ELJ

APPLICABLE TO GOODS SUBJECT TO THE EAR
These commodities, technology or software were exported from the U.S.A. in accordance with the Export Administration Regulations (EAR). Diversion contrary to U.S. law is prohibited

Parts accompanied by a manufacturer's Certificate of Conformity only are not manufactured under any Aviation Authority's approval unless explicitly stated differently on the manufacturer's certificate.

CERTIFICATE OF CONFORMANCE
We herewith certify that the parts listed are in accordance with the purchase order requirements. Certificates are on file and may be reviewed upon request. Only valid when stamped and signed by Q.C. authorized employees of Avio-Diepen, Inc.

Initials:
Stamp:

AVIO-DIEPEN INC.
561 AIRPORT SOUTH PARKWAY, SUITE 500
ATLANTA, GEORGIA 30349
UNITED STATES
FAX : +1-770-996-8430
SITA: HAGME7X

EXPORT INVOICE

Number : 493878 Page 1 of 1
Date : 2011-04-18
Contact: Eric Jackson
Phone : +1-770-996-6430

-Consignee-
AERO DESIGN LTD
2013-39TH AVENUE NE
CALGARY ALBERTA T2E 6R7
CANADA 1

-Sold to-
AERO DESIGN LTD
2013-39TH AVENUE NE
CALGARY ALBERTA T2E 6R7
CANADA

-Ship to-
AERO DESIGN LTD
2013-39TH AVENUE NE
CALGARY ALBERTA T2E 6R7
CANADA

Attn : JEFF CLARKE
Your Ref : 11012

Your VATNO :
Our VATno : -
Our orderno : 400301/AER736

Prices : EXW - EX WORKS ATLANTA
Delivery : EXW - EX WORKS ATLANTA
Customs : Free -
Transport : UPS GROUND TRACKING
Account no : 1016Y4

Criticality : Normal

It.	Partno and description	Quantity	Unit	Unit-price	Disc%	Amount
001	40088-14 STUD TIEDOWN YOUR ITEM: 1 COUNTRY OF ORIGIN: UNITED STATES ECCN CODE: EAR99 SCHEDULE B: 8803300030	132.0	EACH	17.91	0.0	2364.12
					USD	2364.12

APPLICABLE TO GOODS SUBJECT TO THE EAR
These commodities, technology or software were exported from the U.S.A. in accordance with the Export Administration Regulations (EAR).
Diversion contrary to U.S. law is prohibited.

This export invoice is issued for transportation and customs purposes only.
DO NOT PAY ON THIS INVOICE
Original invoice will follow.

CANADA CUSTOMS INVOICE
FACTURE DES DOUANES CANADIENNES

1. EXPORTER/SHIPPER: AVIO-DIEPEN INC. 561 AIRPORT SOUTH PARKWAY ATLANTA GA. 30349	2. DATE OF DIRECT SHIPMENT TO CANADA / DATE D,EXPEDITION DIRECTE VERS LE CANADA: 3. P.O NO. / NBRE DE COMMANDE DE L'ACHETEUR (AUTRES REFERENCE S'IL Y A LIEU): 4. CURRENCY OF SETTLEMENT / DEVISES DU PALEMENT: U.S. DOLLARS
1. CONSIGNEE / DESTINATAIRE 2. AERO DESIGN LTD. 3. 2010-39TH AVENUE NE. 4. CALGARY ALBERTA T2E 6R7 5. CANADA	6. PURCHASER'S NAME AND ADDRESS (IF OTHER THAN CONSIGNEE) NOM ET ADRESSE DE L'ACHELEUR (S'ILDIFFERE DU DESTINATAIRE
7. CANADIAN CUSTOMS BROKER (NAME AND ADRESS): AGENT CANADIAN EN DOUANE (NOM ET ADRESSE):	8. CANADIAN CUSTOMS CLEARANCE LOCATION (INSTALLATION DE DEDOUANEMENT): 9. COUNTRY OF TRANSSHIPMENT (PAYS DE TRANSBORDEMENT): 10. COUNTRY OF ORIGIN (PAYS D'ORIGINE DES MARCHANDISES): UNITED STATES IF THE SHIPMENT INCLUDES GOODS OF DIFFERENT ORIGINS ENTER ORIGINS AGAINST ITEMS IN FIELD 12./ SI L'EXPEDITION COMPREND DES MARCHANDISES D'ORIGINES DIFFERENTES PRECISER LEUR PROVENANCE EN ZONE 12.
11. TRANSPORTATION: GIVE MODE AND PLACE OF DIRECT SHIPMENT TO CANADA/ TRANSPORT: PRECISER MODE ET POINT D'EXPEDTION DIRECTE VERS LE CANADA:	12. CONDITIONS OF SALE AND TERMS OF PAYMENT CONDITIONS DE VENTE ET MODALITES DE PAIEMENT:

13. NO. OF PKGS. ---------- NBRE DE COILS	14. SPECIFICATION OF COMMODITIES (KIND OF PACKAGES, MARKS AND NUMBERS, GENERAL DESCRIPTION AND CHARACTERISTICS, IE. GRADE, QUALITY) / DESIGNATION DES ARTICLES (NATURE DES COLIS, MARQUES ET NUMEROS, DESCRIPTION GENERAL ET CARACTERISTIQUES,P. EX. CLASSE, QUALITE):	15. QUANTITY (STATE UNIT) ---------- QUANTITE (PRECISER-l'UNITE)	16. SHIPPING WEIGHT (LBS.) ---------- POIDS D'EXPEDITION (LIVRES)	17. UNIT PRICE ---------- PRIX UNITAIRE	18. TOTAL
	40088-14 STUD TIEDOWN	132.0		17.91	2364.12
21. IF ANY FIELDS 1 TO 20 ARE INCLUDED ON AN ATTACHED COMMERCIAL INVOICE, CHECK THIS_____ SI TOUTE RESEIGNEMENT AUX ZONES 1 A 20 FIGURE SUR UNE OU DES FACTURES COMMERCIALES CI-ATTACHEES, COCHER CETTE CASE COMMERCIAL INVOICE NO. / N DE LA FACTURE COMMERCIALE-_____YES_____		NET	GROSS / BRUT	2364.12	

22. VENDOR / SELLER (IF OTHER THAN EXPORTER):	23. ORIGINATOR (NAME AND ADDRESS) / EXPEDITEUR D' ORIGINE:
24. DEPARTMENTAL RULING (IF APPLICABLE) / DECISION DU MINISTERE (S'IL Y A LIEU):	25. IF FIELDS 26 TO 28 ARE NOT APPLICABLE, CHECK THIS BOX_____ SI LES ZONES 26 A 28 SONT SANS OBJET, COCHER CETTE CASE

26. IF INCLUDED IN FIELD 20 INDICATE AMOUNT: (SI COMPRIS DANS LE TOTAL A LA ZONE 20, PRECISER)	27. IF NOT INCLUDED IN FIELD 20 INDICATE AMOUNT: (SI NON COMPRIS DANS LE TOTAL A LA ZONE 20, PRECISER):	28. CHECK (IF APPLICABLE): COCHER (S'IL Y A LIEU):
(i) *TRANSPORTATION CHARGES, EXPENSE AND INSURANCE FROM THE PLACE OF DIRECT SHIPMENT TO CANADA. LES TRAIS DE TRNSPORT, DEPENSES ET ASSURANCES A PARTIR DU POINT D'EXPEDITION DIRECTE VERS LE CANADA _____ (ii) COSTS FOR CONSTRUCTION, ERECTION AND ASSEMBLY INCURRED AFTER IMPORTATION INTO CANADA. LES COUTS DE CONSTRUCTION, D'ERECTION ET D'ASSEMBLAGE APRES IMPORTATION AU CANADA. _____ (iii) EXPORT PACKING. (LE COUT DE L'EMBALLAGE D'EXPORTATION). _____	(I) TRANSPORTATION CHARGES, EXPENSE AND INSURANCE TO THE PLACE OF DIECT SHIPMENT TO CANADA. LES FRAISDE TRANSPORT, DEPENSES ET ASSURANCES JUSQU AU POINT D'EXPEDITION DIRECT VERE LE CANADA _____ (ii) AMOUNTS FOR COMMISSIONS OTHER THAN BUYING COMMISSIONS. LES COMMISSIONS AUYTRES QUE CELLES VERSEES PUOR L'ACHAT. _____ (iii) EXPORT PACKING. (LE COUT L'EMBALLAGE D'EXPORTATION). _____	____ (i) ROYALTY PAYMENTS OR SUBSEQUENT PROCEEDS ARE PAID OR PAYABLE BY THE PURCHASER. (DES REDEVANCES OU PRODUIT ONT ETE OU SERONT VERSES PAR L'ACHETEUR). ____ (ii) THE PURCHASER HAS SUPPLIED GOODS OR SERVICES FOR USE IN THE PRODUCTION OF THESE GOODS. (L'ACHETEUR A FOURNI DES MARCHANDISES OU DES SERVICES DES MARCHANDISES).

AERO Design Ltd.
2013 - 39th Avenue N.E.
Calgary, Alberta, T2E 6R7
Phone: (403) 250-8027
Fax: (403) 250-8333

Purchase Order

P.O. Number	**11011**
Date	20-Jan-11

Vendor:	
Name:	Ryerson Metals
Address:	7910 - 40th Street Calgary AB T2C 2Y3
Phone:	403-250-2866
Fax:	403-250-9884
Attention:	Travis Flood
Currency:	CAD

Ship To:	
Name:	AERO Design Ltd.
Address:	2013 - 39th Avenue N.E. Calgary, Alberta, T2E 6R7
Phone:	(403) 250-8027
Fax:	(403) 250-8333
Attention:	Jeff Clarke

ITEM	DESCRIPTION	QTY	RATE	AMOUNT
1	0.125" x 1.0 Flat Bar 304 Stainless Steel	48		0.00
2	0.063" x 48" x 96" Tread Plate 3003H22 Bright C102	2		0.00
		Subtotal		0.00
	Sales Tax	GST	5.00%	0.00
		Total	**CAD**	**$0.00**

RYERSON
Ryerson Canada, Inc.

Packing List
Shipping Order

· MO #
7910 40TH STREET SE CALGARY AB T2C2Y3
7910 40TH STREET SE CALGARY AB T2C2Y3
Phone (403) 250-2866

 01/20/11 20:00 CST
SO AP

Order Number
95-368575
Purchase Order
11011

SOLD TO:
AERO DESIGN LTD (496011 AB LTD
2013 - 39TH AVE N.E.
CALGARY AB T2E 6R7

SHIP TO:
AERO DESIGN LTD (496011 AB LTD)
2013 - 39TH AVE N.E.
CALGARY AB T2E 6R7 Phone (403)250-8027

Total Packages: 2

Ship Via	Freight	Customer #	Sales	Tax Status	Contact	Certs	Due Date
INTEGRIS ROB LARDIE	Our Truck Prepaid/Allowe	300379	11 TF	Taxable			01/21/2011

Bill of Lading:	Pro Bill:	Ship Approval:	Ship Date:	Order Date:
				01/20/2011

Line No.	Item	Description	Qty Shipped	B/O Quantity
1	7131-1500	DC304L FLAT BAR A240 .125 X 1.000 X 12'		
		Tariff Code: 7222.20.90.13		
Qty Comm: 4		Order Qty: 48.0000 UFT Pcs: 4	48.00 UFT	
(1 -BUNDL 20)				
		Cntrl: 95C99276 H: 7HW1 T: 228169 4 pcs Loc SCALE		
*** Filled by Initials: JR				
2	5548-4260	AL PLT TREAD 3003H22 BRIGHT C 102 .063 X 48 X 96		
		Tariff Code: 7606.12.10.51		
Qty Comm: 2		Order Qty: 2 UEA Pcs: 2	2.00 UEA	
(1 -SKID 105)				
		Cntrl: 95C98751 H: 377041 T: 241849 2 pcs Loc FLOOR Wt: 2		
*** Filled by Initials: CR				

Customer/Driver Instructions:

Packing List

Received by: _____ Date: _____

Acceptance of goods constitutes acceptance of our Terms and Conditions, available on our website at www.ryerson.com (or from your sales representative, or by calling (800) 328-7800).

Alloys of Aluminum, Copper, Steel **Caution:**
Processing of this material may present a physical and or health hazard. See material safety data sheets for further information

AERO DESIGN LTD (496011 AB LTD) P.O. - 11011 S.O. - 368575

PHOENIX TUBE COMPANY,INC.

Manufacturer of Stainless Ornamental and Structural Tubing

CERTIFICATION OF TEST

Sold To: RYERSON CANADA
7945 CORONET ROAD
780-469-0402
EDMONTON AB T6E
CAN

Ship To: RYERSON CANADA
7945 CORONET ROAD
780-469-0402
EDMONTON AB T6E
CAN

CUSTOMER ORDER#: 688736
CUST REF NBR:
DATE SHIPPED: 10/11/10
SIZE: 1" X 1/8" HRAP
SOURCE: USA D
VENDOR: NAS

Phone# 4690402 Ext:
ORDER#: 228169
QTY SHIPPED: 1085.0
GRADE: 304L NO WELD: BAR
HEAT#: 7HW1
TEST REPORT#: TR009271
Report Date: 09/13/10

Specification:

CHEMISTRY THIS COLUMN:

ASTM A276-08 COND. A	ASTM A262, PRACTICE E	ASTM A240-09	TYPE 304L/304 DUAL CERTIFIED
ASME SA276-08 COND. A	CORROSION OK, HRAP	ASME SA240-09	UNS# 30400
ASTM A479-08, S2.1	ASTM A484-08	MILS 5059D AMEND 3	ASTM A666-03
ASME SA479-08, S2.1	ASME SA484-08	AMS 5639H & AMS 5647H	AMS5511H/AMS5513J
QQ-S-763F, COND. A	NO WELD REPAIR	ASTM A480-09	QQ-S-766D, COND. A
EN 10204 2.2	ASME SA 480-09		

7H311500/932740 SEZ

MERCURY IS NOT USED BY US AS AN ALLOYING MATERIAL NOR IS METALLIC MERCURY HANDLED IN THE VICNITY OF OUR PROCESSING LINES. WE ARE NOT PRESENTLY AWARE OF ANY MERCURY CONTAMINATION.

MATERIAL HAS BEEN HEATED TO A MINIMUM OF 1900 DEG. F AND IS SUBSEQUENTLY COOLED RAPIDLY TO PREVENT CARBIDE PRECIPITATION.

Chemical Analysis

C	MN	P	S	SI	CR	NI	MO	CU	CO	N2	T1
.018	1.67	.031	.001	.43	18.09	8.06	.28	.52	0	.06	0

Physical Analysis

	YIELD		TENSILE		OTHER	
Hardness	PSI	MPA	PSI	MPA	Percent EL	Percent RA
RB 87.	56150	0	90580	0	50.	63.

228169

THE CHEMICAL ANALYSES ARE CORRECT AS CONTAINED IN OUR CORPORATE RECORDS.
PHYSICAL PROPERTIES ARE DETERMINED WHILE MATERIAL IS IN STRIP FORM.

Melted & Manufactured In the USA FAR BAA complies, DFARS BAA complies, FAR TAA complies

CERTIFIED BY: Jerry Cirfo

1185 WIN DR ,BETHLEHEM, PA., 18017 - (610) 865-5337
FAX NUMBER: 610-865-4073

AERO Design Ltd.
2013 - 39th Avenue N.E.
Calgary, Alberta, T2E 6R7
Phone: (403) 250-8027
Fax: (403) 250-8333

Purchase Order

P.O. Number	**11010**
Date	18-Jan-11

Vendor:	
Name:	McGregor and Thompson Hardware
Address:	4574 - 14th Street NE Calgary, AB, T2E 6T7
Phone:	403-250-9311
Fax:	403-250-9313
Attention:	Adela Shapka
Currency:	CAD

Ship To:	
Name:	AERO Design Ltd.
Address:	2013 - 39th Avenue N.E. Calgary, Alberta, T2E 6R7
Phone:	(403) 250-8027
Fax:	(403) 250-8333
Attention:	Jeff Clarke

ITEM	DESCRIPTION	QTY	RATE	AMOUNT
1	Door Mutes - 1/8" Rise	1000	0.20	200.00
		Subtotal		200.00
	Sales Tax	GST	5.00%	10.00
		Total	**CAD**	**$210.00**

McGREGOR & THOMPSON HARDWARE LTD.
McGREGOR GROUP

HEAD OFFICE
1250 EAST GEORGIA STREET
VANCOUVER, B.C. V6A 2B1
PHONE (604) 253-8252
FAX (604) 253-4260
TOLL FREE 1-800-563-4888

DISTRICT OFFICE
1420 HUNTER COURT
KELOWNA, B.C. V1X 6E6
PHONE (250) 860-6282
FAX (250) 860-7743
TOLL FREE 1-800-663-1223

DISTRICT OFFICE
#5-2525 McCULLOUGH ROAD
NANAIMO, B.C. V9S 4M9
PHONE (250) 729-7888
FAX (250) 756-1160
TOLL FREE 1-888-404-1411

DISTRICT OFFICE
466 BAY STREET
VICTORIA, B.C. V8T 5H2
PHONE (250) 383-8666
FAX (250) 383-8654
TOLL FREE 1-877-283-8666

DISTRICT OFFICE
4574 - 14th STREET N.E.
CALGARY, ALBERTA T2E 6T7
PHONE (403) 250-9311
FAX (403) 250-9313

E-MAIL info@mcgregor-thompson.com WEB PAGE HTTP: //www.mcgregor-thompson.com

PICKING SLIP

PICKING SLIP NO. 377014

DATE 01/20/11

PAGE 1

SHIP TO: AERO DESIGN
AERO DESIGN
BC

SHIP TO	DEPARTMENT	ESTIMATE NO.	YOUR P.O. NUMBER	SALES REPRESENTATIVE	SHIP VIA	PPD/COLL	VOLUME	WEIGHT
*18		0	11010	ADELA SHAPKA	CUSTOMER P/U	coll	0	

SOLD TO	ORDER NO.	REQUEST DATE	MEMO	WHS	JOB NO.
*18	321244	01/18/11	JEFF 403-250-8027	R	

LINE	BIN	ITEM	DESCRIPTION	UOM	ON ORDER	TO BE SHIPPED	REFERENCE
1		GJ64	DOOR MUTES-1/8" RISE	EACH	1000	1000	

Jeff Clark.

WAYBILL NO. _____ PICKED BY _____ DATE _____

CUSTOMER COPY

AERO Design Ltd.
2013 - 39th Avenue N.E.
Calgary, Alberta, T2E 6R7
Phone: (403) 250-8027
Fax: (403) 250-8333

Purchase Order

P.O. Number	**11008**
Date	19-Jan-11

Vendor:	
Name:	Thomas Skinner and Sons Ltd.
Address:	Bay 6, 4925 - 77th Ave. S.E. Calgary, AB, T2C 2X4
Phone:	720-3201
Fax:	0
Attention:	0
Currency:	CAD

Ship To:	
Name:	AERO Design Ltd.
Address:	2013 - 39th Avenue N.E. Calgary, Alberta, T2E 6R7
Phone:	(403) 250-8027
Fax:	(403) 250-8333
Attention:	Jeff Clarke

ITEM	DESCRIPTION	QTY	RATE	AMOUNT
1	PTD-097745 #4 x 5" Long HSS Centre Drill	5	19.74	98.70
		Subtotal		98.70
	Sales Tax	GST	5.00%	4.94
		Total	**CAD**	**$103.64**

Thomas Skinner
13880 Vulcan Way
Richmond, BC V6V 1K6, Canada
Phone: (604) 276.2131
Fax: (604) 276.8545
http: //www.tskinner.com
e-mail: tss@tskinner.com

PACKING LIST

Shipment Discrepancies:
All lost or short shipment claims must be made within five days after receipt of merchandise. Freight damage is to be claimed against the carrier upon receipt of goods.

Pick Ticket Number	
3487946	
Pick Date	Page
01/19/11	1 of 1
Order Number	
1469110	

Bill To:
AERO DESIGN LTD.
2013-39TH AVE. NE
CALGARY, AB T2E 6R7
1-403-250-8027

Ship To:
AERO DESIGN LTD.
2013-39TH AVE. NE
CALGARY, AB T2E 6R7

Customer ID: 111415 **Carrier ID:** PREPAID AND CHARGE **Tracking #:** YBQAL0300002

PO Number	*Terms*
11008	Net 30

Order Date	*Pick Ticket*
01/19/2011	3487946

Quantities				*Item ID* / *Item Description*	*Pricing UOM*	*Unit Price*	*Extended Price*
Ordered	*Shipped*	*Remain / Size*	*Disp.*				
5.0000	5.0000	0.0000		PTD-097745	EA	19.7400	98.70
		1.0		CENTRE DRILL #4 HSS E/L 76LO BRT			

Total Pieces: 5 ***Total Lines:*** 1 ***Total Weight:*** 0.00
Route: 3

SUB-TOTAL:	98.70
GST:	4.94
FREIGHT:	9.36
AMOUNT DUE:	113.00

AERO Design Ltd.
2013 - 39th Avenue N.E.
Calgary, Alberta, T2E 6R7
Phone: (403) 250-8027
Fax: (403) 250-8333

Purchase Order

P.O. Number	**11007**
Date	18-Jan-11

Vendor:	
Name:	Voss Industries Inc.
Address:	2168 West 25th Street Cleveland, Ohio, 44113-4172
Phone:	216-771-7655
Fax:	216-771-2887
Attention:	Dara Hanners
Currency:	USD

Ship To:	
Name:	AERO Design Ltd.
Address:	2013 - 39th Avenue N.E. Calgary, Alberta, T2E 6R7
Phone:	(403) 250-8027
Fax:	(403) 250-8333
Attention:	Jeff Clarke

ITEM	DESCRIPTION	QTY	RATE	AMOUNT
1	FT4F-175H T-Bolt per your quote #160111	500	2.85	1,425.00
	Payment by US Money Order/draft Mailed FEB 3/11			
	Please ship UPS Standard on our account 1016Y4			
		Subtotal		1,425.00
				0.00
		Total	**USD**	**$1,425.00**

VOSS INDUSTRIES, INC.
Clamp Technology • Voss Aerospace • Voss Technologies

2168 West 25th Street
Cleveland, Ohio 44113
Tel: 216.771.7655
Fax: 216.771.2887
Email: voss@vossind.com

DATE: **Feb 15 2011**

ADDRESSEE: **AERO DESIGN LTD**

ATTENTION: J. CLARKE

FACSIMILE TELEPHONE NUMBER: 403-250-8333

Thank you for your Purchase Order Number **11007**

(Voss Quote # **160111/00/** Voss SWO # **153041/**

1) Terms are as follows: **NET 30**

2) F.O.B. ___ Cleveland, OH **X** Exworks our plant, Cleveland, Ohio

3) Delivery: Week of **3/21/11**
(A $250 charge may be imposed on any changes in the delivery as stated above.)

4) Order will be shipped via: **UPS SURFACE GRD**

___ Prepay and add ✓ Freight collect/Acct # See below

5) Part Number ordered: **NO CUSTOMER DRAWING** Rev ___

Voss Part Number: **FT4F-175H**
T BOLT

6) Quantity ordered: **500**

7) Price (each) $ **2.85**

8) Comments:

UPS ACCT #1016Y4
NOTE: MARK FOR ATTN: JEFF CLARKE
PAYMENT BY ADVANCE MONEY ORDER

FAXED
FEB 16 2011

Signature: D Hansen (Voss Sales)

This drawing/communication may contain confidential technical information and trade secrets of Voss Industries Inc. This drawing/communication may not be disclosed, duplicated or used for any purpose without prior written consent of Voss Industries.

2168 West 25th Street
Cleveland, OH 44113
Phone: (216) 771-7655
Fax: (216) 771-2887

DATE: 2/3/11

ADDRESSEE: Aero-Design Ltd
ATTENTION: Jeff Clarke
FACSIMILE TELEPHONE NUMBER: 1-403-250-8333

DEPARTMENT: Sales
TOTAL NUMBER OF PAGES FAXED: 1

Thank you for your Purchase Order Number 11007
Ref. Voss SWO 153041

Thank you!

SUBJECT TO VOSS INDUSTRIES INC. TERMS AND CONDITIONS

We acknowledge receipt and will formally accept this order pending our internal review and credit approval.

Be advised that our general terms are Net 30 days (*) F.O.B. Cleveland OH, unless otherwise stated on our quotation.

Per our Quotation Number 160111, delivery will be approximately 6 weeks after receipt of order.

(* will be paid by US money order per customer.)

Signature: Dara Hanners 2/3/11

cc rep: F4 Interface

:jr/ACK

This drawing/communication contains confidential technical information and trade secrets for Voss Industries Inc. This drawing/communication may not be disclosed, duplicated or used for any purpose without prior written consent of Voss Industries Inc.

QF-146-1

Jan. 10. 2011 9:12AM VOSS INDUSTRIES INC.

VOSS INDUSTRIES, INC.
Clamp Technology • Voss Aerospace • Voss Technologies
2168 West 25th Street • Cleveland, Ohio 44113-4172
Tel: 216.771.7655 • Fax: 216-771-2887 • Email: voss@vossind.com

QUOTE TO:

AERO DESIGN LTD
ATTN JEFF CLARKE
2013 39TH AVENUE NE
CALGARY AB CANADA
T2E 6R7

PHONE#: 403 250-8027
FAX #: 403 250-8333

PURCHASE ORDER NUMBER NO. 950DAR QTY. PURCHASE ORDERS PERTAINING TO THIS QUOTE

DATE: 1/17/11 PAGE NO:

QUOTE #	VALID UNTIL	SALESMAN
160111/	2/16/11	I4
CUSTOMER #	CUSTOMER REFERENCE	
893/00	EMAIL IQN 1/13/11	

REPRESENTED BY
INTERFAST-CALGARY
CALGARY ALBERTA CANADA
TEL: (403) 400-5329
FAX: (403) 451-1849

VOSS IS CERTIFIED TO ISO9001:2000 and AS9100B

REFERENCE VOSS PART NUMBER ON ORDERS PLACED WITHOUT CUSTOMERS DRAWING

CUSTOMER PART NUMBER	VOSS PART NUMBER AND DESCRIPTION	QUANTITY	EACH PRICE (US$)
NO CUSTOMER DRAWING	T BOLT FT4F-175H	500 EA	2.85

$1425.00

AR/EAR EXPORT CONTROLS MAY APPLY PER FEDERAL REGULATIONS (22 CFR 120-130)
OTE: DUE TO THE VOLATILITY WITHIN THE METALS MARKET, THE PRICES QUOTED RE SUBJECT TO ADJUSTMENT AT THE TIME OF ORDER PLACEMENT

or Certifications beyond Voss Standard C of C, a $150.00 harge will be assessed for each line item per shipment.

% SURCHARGE ADDED FOR ALL CREDIT CARD PURCHASES

PER D. Hanners
(NAME/TITLE)
DARA HANNERS, X-215
SALES COORDINATOR

DELIVERY: 6 WEEKS ARO
F.O.B: CLEVELAND OHIO
TERMS: NET 30 DAYS
PRICE(S) ARE BASED ON ONE DELIVERY UNLESS OTHERWISE NOTED

These prices are for immediate acceptance and are subject to change without notice. All agreements entered into are subject to delays from causes beyond our control. Tooling and drawings remain our property unless other arrangements are authorized in advance. Voss terms and Conditions apply.

VOSS INDUSTRIES, INC.
Clamp Technology • Voss Aerospace • Voss Technologies
2188 West 25th Street • Cleveland, Ohio 44113-4172
Tel. 216.771.7655 • Fax: 216-771-2887 • Email: voss@vossind.com

QUOTE TO:

AERO DESIGN LTD
ATTN JEFF CLARKE

6R7

ENGINEERING NO. 930JA OR PURCHASE ORDERS PERTAINING TO THIS QUOTE

DATE: 1/17/11 PAGE NO:

QUOTE #	VALID UNTIL	SALESMAN
160111/	2/16/11	I4

CUSTOMER #	CUSTOMER REFERENCE
893/00	EMAIL IQN 1/13/11

REPRESENTED BY

INTERFAST-CALGARY
CALGARY ALBERTA CANADA
TEL: (403) 400-5329
FAX: (403) 451-1849

VOSS IS CERTIFIED TO ISO9001:2000 and AS9100B

OMMERS DRAWING

ESCRIPTION	QUANTITY	EACH PRICE (US$)
	500 EA	2.85

$ 1425.00

2 CFR 120-130)
RICES QUOTED

PER D Hanners
(NAME/TITLE)

DARA HANNERS, X-215
SALES COORDINATOR

HIO

NE DELIVERY UNLESS OTHERWISE NOTED

Secure Document
Data Business Forms

15540 (1005)

THE BACK OF THIS DOCUMENT CONTAINS A TD LOGO WATERMARK - DOCUMENT VOID IF MISSING

The Toronto-Dominion Bank

56-382
412

293 - 07976340 No. - 7976340

Pay to the Order of VOSS INDUSTRIES INC. Date February 02, 2011

U.S. $ ******1,425.00 United States Dollars

In reimbursement charge account of The Toronto-Dominion Bank, Toronto
Authorized signature required for amounts over U.S. $5,000.00

TD CANADA TRUST 1425.00

To Wells Fargo Bank, N.A.
115 Hospital Drive
Van Wert, OH 45891

Authorized Officer

Countersigned

Number

⑈07976340⑈ ⑆041203824⑆ 9600003324⑈

These prices are for immediate acceptance and are subject to change without notice. All agreements entered into are subject to delays from causes beyond our control. Tooling and drawings remain our property unless other arrangements are authorized in advance. Voss terms and Conditions apply.

Form No. VPS-1202 REV. 2/08

ISO 9100 - Revision B and ISO 9001:2000 Certified

VOSS INDUSTRIES INC.
Divisions: Voss Aerospace • Voss Technologies
2168 WEST 25TH STREET • CLEVELAND, OHIO 44113-4172
PHONE: 216-771-7655 • FAX 216-771-2887

PACKING SLIP

DATE: Mar 16, 2011
PACKING SLIP NO: 188923 C
JOB NUMBER: 153041

Sold to:
AERO DESIGN LTD
ATTN ACCOUNTS PAYABLE
2013 39TH AVENUE NE
CALGARY AB CANADA
T2E 6R7

Ship to:
AERO DESIGN LTD
ATTN RECEIVING
2013 39TH AVENUE NE
CALGARY AB CANADA
T2E 6R7

Cust No.	Customer P.O. No.	Ship Date	Ship Via	F.O.B.
893/00	11007	3/16/11	UPS COLLECT	VOSS PLT

Our Order NO.	Order Date	Sales Rep	Terms
153041	2/03/11	I4	ADVANCE PAYMENT

Qty. Ordered	Qty. Shipped	Part/ Description		UM
500	500	FT4F-175H	REV-T	EA

T BOLT
Voss Internal #: 0416442
ITEM #1
UPS ACCT #1016Y4
ATTN: JEFF CLARKE

1 CTN @ 15# - 1 CTN @ 500 PCS

ITAR/EAR EXPORT CONTROLS MAY APPLY PER FEDERAL REGULATIONS (22 CFR 120-130)

ITAR/EAR EXPORT CONTROLS MAY APPLY PER FEDERAL REGULATIONS (22 CFR 120-130)

PLEASE DO NOT ASSUME ANY DEBITS UNTIL VOSS CREDIT IS AUTHORIZED.
WE HEREBY CERTIFY THAT THESE GOODS PRODUCED IN COMPLIANCE WITH ALL APPLICABLE REQUIREMENTS OF SECTIONS 6, 7 AND 12 OF THE FAIR LABOR STANDARDS ACT, AS AMENDED, AND OF REGULATIONS AND ORDERS OF THE UNITED STATES DEPT. OF LABOR ISSUED UNDER SECTION 14 THEREOF.

EEO CLAUSE from EXECUTIVE ORDER 11246

EQUAL EMPLOYMENT OPPORTUNITY: The Equal Employment Opportunity clause in Section 202, Paragraphs 1 through 7 of Executive Order 11246, as amended, relative to equal employment opportunity and the implementing Rules and Regulations of the Office of Federal Contract Compliance and the affirmative action clauses set forth in 41C.F.R. 60-250.4 and 41C.F.R. 60-741.4 relating to disabled veterans, veterans of the Vietnam era and handicapped individuals are incorporated herein by specific reference.

FORM: QF: 56

AERO Design Ltd.
2013 - 39th Avenue N.E.
Calgary, Alberta, T2E 6R7
Phone: (403) 250-8027
Fax: (403) 250-8333

Purchase Order

P.O. Number	**11006**
Date	06-Jan-11

Vendor:	
Name:	API
Address:	Suite 5 575 Palmer Road N.E. Calgary, Alberta T2E 7G4
Phone:	403-250-9383
Fax:	403-250-8186
Attention:	0
Currency:	CAD

Ship To:	
Name:	AERO Design Ltd.
Address:	2013 - 39th Avenue N.E. Calgary, Alberta, T2E 6R7
Phone:	(403) 250-8027
Fax:	(403) 250-8333
Attention:	Jeff Clarke

ITEM	DESCRIPTION	QTY	RATE	AMOUNT
1	AN4-14A Bolt (10 pk)	15	4.58	68.70
2	AN4-5A Bolt (25 pk)	2	5.73	11.46
3	AN6-20A Bolt (4 pk)	10	6.32	63.20
4	AN960-616 Washer (100 pk)	2	4.04	8.08
5	CR3523-05-02 Rivet (100 pk)	2	230.00	460.00
		Subtotal		611.44
	Sales Tax	GST	5.00%	30.57
		Total	**CAD**	**$642.01**

01/13/2011 15:20:06

API
AEROSPACE PRODUCTS INTERNATIONAL

API
2461 46th Ave.
LACHINE QC H8T 3C9
CANADA

Pack List

Shipping Address
AERO DESIGN LTD
2013 39 AVE NE
CALGARY AB T2E 6R7
CANADA

Forwarding Agent's Address

Shipping Instructions
Detailed Shipping Instructions at the end of the document

Packing Instructions
Detailed Packing Instructions at the end of the document

Information

Document Number	80830799
Document Date	01/12/2011
Purchase Order No.	11006
Purchase Order Date	01/06/2011
Sales Order Number	737638
Sales Order Date	01/06/2011
Customer Number	5101060
Shipping Conditions	Will Call
Incoterms	
Cust Ship Acct	
Delivery Date	01/12/2011
Bill of Lading	
Total Volume	0.100 IN3
Carrier	UPS CANADA

Item	Material	Material Description	Quantity	Weight	Batch Num
10	CR3523-5-2	CHERRY RIVET (SELL ONLY IN BAGS OF 100)			

Total Qty Ordered: 200.000 EA Remaining Qty: 100.000

Batches

0001713665 (PO:4500134924) 100 EA 0 LB

Shipping and Packing Instructions

CERTIFICATE OF CONFORMANCE

I hereby certify that th eaircraft parts described hereon were acquired from a source of supply that is consistent with the conditions under which Transport Canada distributor approval number 77-98 has been granted.

Authorized Signature _____

AO # 77-98
API # 11

Return Policies

Warranty Information

The manufacturer warrants most products sold by API. In addition, API will gladly process warranty claims for products originally purchased through API. API offers no additional warranty beyond that of the manufacturer. Many manufacturers include warranty information in their packaging. Please feel free to contact an API Quality Service Representative concerning warranty information or to obtain the RMA (Return Materials Authorization) needed to file a warranty claim. To speak with an API Quality Service Representative dial 888-API-24X7 (888-274-2497). RMAs are valid for 30 days from date issued.

A warranty claim form and an RMA must accompany all products returned for warranty. Without this documentation API will not be able to assist you in filing your claim. Manufacturer warranty claim forms are available at WWW.APIWORLDWIDE.COM.

Please be advised that some manufacturers honor warranties by remanufacturing the part rather than issuing credit. API will return the remanufactured part to the customer.

Returns Made Easy

API accepts most returns that were purchased from our stock within 30 days of invoke. Just call an API Quality Service Representative at 888-API-24X7 (888-274-2497) to obtain the necessary RMA (Return Materials Authorization) number. By simply including the API RMA with your return, the time needed to issue credit is minimized. Nobody enjoys having to return parts. API understands this and makes it as trouble-free as possible. Remember, all returned items must be in their original packaging, must be in new, uninstalled condition and include all original documentation. A restocking fee of 15%, with a minimum of $25.00, will be assessed on all stocked items except those due to an error on API's part. RMAs are valid for 30 days from the date of issue.

No returns will be accepted 30 days from the date of invoice. Please remember that Electrical Components, Shelf-Life Limited, Non-Stock items, Drop-ship Items and Special Orders are non-returnable. Once the RMA expires the return can no longer be accepted by API and will be returned at the customer's expense.

Quick Core Credit

When ordering exchange items, the API system will automatically assign the necessary RMA (Return Materials Authorization) number to return your core. The API CSR will supply you with any additional details needed to return your core. All cores are subject to final inspection and acceptance from the vendor or manufacturer. Unless prior written authorization is obtained from API, all cores must be "like part numbers" and must be in serviceable condition. Otherwise, API will pass on any fees assessed by our manufacturer for substandard or unlike cores.

The API RMA system will print a Core Letter, which includes the customer's name and the API delivery number in which the exchange was purchased. The Core Letter must accompany all core returns. This RMA is valid for 60 days from date of invoice. Please ask your API Quality Service Representative for the return due date of your particular core. Once the RMA expires the core can no longer be accepted by API and will be returned at the customer's expense. *In the event your Return Core Letter is misplaced, contact the API Quality Service Representative to obtain a replacement.*

We appreciate your business and reaffirm our commitment to provide the most responsive customer service, as well as the highest quality compliant products, at competitive prices.

01/11/2011 15:11:08

API
2461 46th Ave.
LACHINE QC H8T 3C9
CANADA

Pack List

Shipping Address
AERO DESIGN LTD
2013 39 AVE NE
CALGARY AB T2E 6R7
CANADA

Forwarding Agent's Address

Shipping Instructions
Detailed Shipping Instructions at the end of the document

Packing Instructions
Detailed Packing Instructions at the end of the document

Information

Document Number	80829233
Document Date	01/07/2011
Purchase Order No.	11006
Purchase Order Date	01/06/2011
Sales Order Number	737638
Sales Order Date	01/06/2011
Customer Number	5101060
Shipping Conditions	Will Call
Incoterms	
Cust Ship Acct	
Delivery Date	01/07/2011
Bill of Lading	
Total Volume	20 IN3
Carrier	UPS CANADA

Item	Material	Material Description	Quantity	Weight	Batch Num
10	AN4-14A	BOLT (PKG 10)			
	Batches				
	0000861852 (PO:4500112959)		1 PAC	0 LB	

Shipping and Packing Instructions

CERTIFICATE OF CONFORMANCE

I hereby certify that th eaircraft parts described hereon were acquired from a source of supply that is consistent with the conditions under which Transport Canada distributor approval number 77-98 has been granted.

Authorized Signature Rw

AO # 77-98
API # 11

Return Policies

Warranty Information

The manufacturer warrants most products sold by API. In addition, API will gladly process warranty claims for products originally purchased through API. API offers no additional warranty beyond that of the manufacturer. Many manufacturers include warranty information in their packaging. Please feel free to contact an API Quality Service Representative concerning warranty information or to obtain the RMA (Return Materials Authorization) needed to file a warranty claim. To speak with an API Quality Service Representative dial 888-API-24X7 (888-274-2497). RMAs are valid for 30 days from date issued.

A warranty claim form and an RMA must accompany all products returned for warranty. Without this documentation API will not be able to assist you in filing your claim. Manufacturer warranty claim forms are available at WWW.APIWORLDWIDE.COM.

Please be advised that some manufacturers honor warranties by remanufacturing the part rather than issuing credit. API will return the remanufactured part to the customer.

Returns Made Easy

API accepts most returns that were purchased from our stock within 30 days of invoke. Just call an API Quality Service Representative at 888-API-24X7 (888-274-2497) to obtain the necessary RMA (Return Materials Authorization) number. By simply including the API RMA with your return, the time needed to issue credit is minimized. Nobody enjoys having to return parts. API understands this and makes it as trouble-free as possible. Remember, all returned items must be in their original packaging, must be in new, uninstalled condition and include all original documentation. A restocking fee of 15%, with a minimum of $25.00, will be assessed on all stocked items except those due to an error on API's part. RMAs are valid for 30 days from the date of issue.

No returns will be accepted 30 days from the date of invoice. Please remember that Electrical Components, Shelf-Life Limited, Non-Stock items, Drop-ship Items and Special Orders are non-returnable. Once the RMA expires the return can no longer be accepted by API and will be returned at the customer's expense.

Quick Core Credit

When ordering exchange items, the API system will automatically assign the necessary RMA (Return Materials Authorization) number to return your core. The API CSR will supply you with any additional details needed to return your core. All cores are subject to final inspection and acceptance from the vendor or manufacturer. Unless prior written authorization is obtained from API, all cores must be "like part numbers" and must be in serviceable condition. Otherwise, API will pass on any fees assessed by our manufacturer for substandard or unlike cores.

The API RMA system will print a Core Letter, which includes the customer's name and the API delivery number in which the exchange was purchased. The Core Letter must accompany all core returns. This RMA is valid for 60 days from date of invoice. Please ask your API Quality Service Representative for the return due date of your particular core. Once the RMA expires the core can no longer be accepted by API and will be returned at the customer's expense. *In the event your Return Core Letter is misplaced, contact the API Quality Service Representative to obtain a replacement.*

We appreciate your business and reaffirm our commitment to provide the most responsive customer service, as well as the highest quality compliant products, at competitive prices.

API
AEROSPACE PRODUCTS INTERNATIONAL

API
#550 - 575 Palmer Road N.E.
CALGARY AB T2E 7G4
CANADA

01/10/2011 13:51:34

Pack List

Shipping Address
AERO DESIGN LTD
2013 39 AVE NE
CALGARY AB T2E 6R7
CANADA

Forwarding Agent's Address

Shipping Instructions
Detailed Shipping Instructions at the end of the document

Packing Instructions
Detailed Packing Instructions at the end of the document

Information

Document Number	80829613
Document Date	01/10/2011
Purchase Order No.	11006
Purchase Order Date	01/06/2011
Sales Order Number	737638
Sales Order Date	01/06/2011
Customer Number	5101060
Shipping Conditions	Will Call
Incoterms	
Cust Ship Acct	
Delivery Date	01/10/2011
Bill of Lading	
Total Weight	2.140 LB
Total Volume	577.410 IN3
Carrier	PICK UP BY CUSTOMER

Item	Material	Material Description	Quantity	Weight	Batch Num
10	AN4-14A	BOLT (PKG 10)			
	Batches				
	0001479984 (PO:4500131033)		4 PAC	0 LB	
	0001710565 (PO:4500134781)		10 PAC	0 LB	
20	AN4-5A	BOLT (PKG 25)			
	Batches				
	0001480066 (PO:4500125368)		2 PAC	0.750 LB	
30	AN6-20A	BOLT (PKG 4)			
	Batches				
	0000133503 (PO:4500085773)		10 PAC	0.750 LB	✓
40	NAS1149F0663 P	WASHER (PKG 100)			
	Requested Part : AN960-616				
	Batches				
	0001707917 (PO:4500134781)		2 PAC	0.640 LB	✓

Shipping and Packing Instructions

CERTIFICATE OF CONFORMANCE

I hereby certify that th eaircraft parts described hereon were acquired from a source of supply that is consistent with the conditions under which Transport Canada distributor approval number 77-98 has been granted.

Authorized Signature

AO # 77-98
API # 11

Return Policies

Warranty Information

The manufacturer warrants most products sold by API. In addition, API will gladly process warranty claims for products originally purchased through API. API offers no additional warranty beyond that of the manufacturer. Many manufacturers include warranty information in their packaging. Please feel free to contact an API Quality Service Representative concerning warranty information or to obtain the RMA (Return Materials Authorization) needed to file a warranty claim. To speak with an API Quality Service Representative dial 888-API-24X7 (888-274-2497). RMAs are valid for 30 days from date issued.

A warranty claim form and an RMA must accompany all products returned for warranty. Without this documentation API will not be able to assist you in filing your claim. Manufacturer warranty claim forms are available at WWW.APIWORLDWIDE.COM.

Please be advised that some manufacturers honor warranties by remanufacturing the part rather than issuing credit. API will return the remanufactured part to the customer.

Returns Made Easy

API accepts most returns that were purchased from our stock within 30 days of invoke. Just call an API Quality Service Representative at 888-API-24X7 (888-274-2497) to obtain the necessary RMA (Return Materials Authorization) number. By simply including the API RMA with your return, the time needed to issue credit is minimized. Nobody enjoys having to return parts. API understands this and makes it as trouble-free as possible. Remember, all returned items must be in their original packaging, must be in new, uninstalled condition and include all original documentation. A restocking fee of 15%, with a minimum of $25.00, will be assessed on all stocked items except those due to an error on API's part. RMAs are valid for 30 days from the date of issue.

No returns will be accepted 30 days from the date of invoice. Please remember that Electrical Components, Shelf-Life Limited, Non-Stock items, Drop-ship Items and Special Orders are non-returnable. Once the RMA expires the return can no longer be accepted by API and will be returned at the customer's expense.

Quick Core Credit

When ordering exchange items, the API system will automatically assign the necessary RMA (Return Materials Authorization) number to return your core. The API CSR will supply you with any additional details needed to return your core. All cores are subject to final inspection and acceptance from the vendor or manufacturer. Unless prior written authorization is obtained from API, all cores must be "like part numbers" and must be in serviceable condition. Otherwise, API will pass on any fees assessed by our manufacturer for substandard or unlike cores.

The API RMA system will print a Core Letter, which includes the customer's name and the API delivery number in which the exchange was purchased. The Core Letter must accompany all core returns. This RMA is valid for 60 days from date of invoice. Please ask your API Quality Service Representative for the return due date of your particular core. Once the RMA expires the core can no longer be accepted by API and will be returned at the customer's expense. *In the event your Return Core Letter is misplaced, contact the API Quality Service Representative to obtain a replacement.*

We appreciate your business and reaffirm our commitment to provide the most responsive customer service, as well as the highest quality compliant products, at competitive prices.

API
AEROSPACE PRODUCTS INTERNATIONAL

API
#550 - 575 Palmer Road N.E.
CALGARY AB T2E 7G4
CANADA
Phone: 403-250-9383
Fax: 403-250-8186
GST # 143526788RT

PRICING LIST

NUMBER	DATE
80829613	01/10/2011

PLEASE REMIT TO:
PO Box
Calgary AB T2P 2H6
REFER TO INVOICE NUMBER WHEN REMITTING

5101060

BILL TO AERO DESIGN LTD
2013 39 AVE NE
CALGARY AB T2E 6R7
CANADA

5101060

SHIP TO AERO DESIGN LTD
2013 39 AVE NE
CALGARY AB T2E 6R7
CANADA

Phone No: 403-250-8027

CUSTOMER PURCHASE ORDER NO.	ORDER NO. / DELIVERY NO.		
11006	737638 - 80829613		
SHIPPED VIA	DELIVERING PLANT	CARTONS	
	API - Calgary	1	

QUANTITY ORDERED	QUANTITY SHIPPED	DESCRIPTION MATERIAL		U/M	LIST PRICE	UNIT PRICE	EXTENDED PRICE
14		BOLT (PKG 10)	AN4-14A	PA	10.17	4.58	64.12
2		BOLT (PKG 25)	AN4-5A	PA	12.73	5.73	11.46
10		BOLT (PKG 4)	AN6-20A	PA	14.04	6.32	63.20
2		WASHER (PKG 100)	NAS1149F0663P	PA	8.98	4.04	8.08
		Item Total					146.86
		Canadian GST					7.34

TOTAL CAD 154.20

Return Policies

Warranty Information

The manufacturer warrants most products sold by API. In addition, API will gladly process warranty claims for products originally purchased through API. API offers no additional warranty beyond that of the manufacturer. Many manufacturers include warranty information in their packaging. Please feel free to contact an API Quality Service Representative concerning warranty information or to obtain the RMA (Return Materials Authorization) needed to file a warranty claim. To speak with an API Quality Service Representative dial 888-API-24X7 (888-274-2497). RMAs are valid for 30 days from date issued.

A warranty claim form and an RMA must accompany all products returned for warranty. Without this documentation API will not be able to assist you in filing your claim. Manufacturer warranty claim forms are available at WWW.APIWORLDWIDE.COM.

Please be advised that some manufacturers honor warranties by remanufacturing the part rather than issuing credit. API will return the remanufactured part to the customer.

Returns Made Easy

API accepts most returns that were purchased from our stock within 30 days of invoke. Just call an API Quality Service Representative at 888-API-24X7 (888-274-2497) to obtain the necessary RMA (Return Materials Authorization) number. By simply including the API RMA with your return, the time needed to issue credit is minimized. Nobody enjoys having to return parts. API understands this and makes it as trouble-free as possible. Remember, all returned items must be in their original packaging, must be in new, uninstalled condition and include all original documentation. A restocking fee of 15%, with a minimum of $25.00, will be assessed on all stocked items except those due to an error on API's part. RMAs are valid for 30 days from the date of issue.

No returns will be accepted 30 days from the date of invoice. Please remember that Electrical Components, Shelf-Life Limited, Non-Stock items, Drop-ship Items and Special Orders are non-returnable. Once the RMA expires the return can no longer be accepted by API and will be returned at the customer's expense.

Quick Core Credit

When ordering exchange items, the API system will automatically assign the necessary RMA (Return Materials Authorization) number to return your core. The API CSR will supply you with any additional details needed to return your core. All cores are subject to final inspection and acceptance from the vendor or manufacturer. Unless prior written authorization is obtained from API, all cores must be "like part numbers" and must be in serviceable condition. Otherwise, API will pass on any fees assessed by our manufacturer for substandard or unlike cores.

The API RMA system will print a Core Letter, which includes the customer's name and the API delivery number in which the exchange was purchased. The Core Letter must accompany all core returns. This RMA is valid for 60 days from date of invoice. Please ask your API Quality Service Representative for the return due date of your particular core. Once the RMA expires the core can no longer be accepted by API and will be returned at the customer's expense. *In the event your Return Core Letter is misplaced, contact the API Quality Service Representative to obtain a replacement.*

We appreciate your business and reaffirm our commitment to provide the most responsive customer service, as well as the highest quality compliant products, at competitive prices.

API
AEROSPACE PRODUCTS INTERNATIONAL

API
2461 46th Ave.
LACHINE QC H8T 3C9
CANADA
Phone: 514-636-5720
Fax: 514-636-6092
GST # 143526788RT

PRICING LIST

NUMBER	DATE
80829233	01/11/2011

PLEASE REMIT TO:
PO Box
Calgary AB T2P 2H6
REFER TO INVOICE NUMBER WHEN REMITTING

5101060

BILL TO AERO DESIGN LTD
2013 39 AVE NE
CALGARY AB T2E 6R7
CANADA

5101060

SHIP TO AERO DESIGN LTD
2013 39 AVE NE
CALGARY AB T2E 6R7
CANADA

Phone No: 403-250-8027

CUSTOMER PURCHASE ORDER NO.	ORDER NO. / DELIVERY NO.		
11006	737638 - 80829233		
SHIPPED VIA	DELIVERING PLANT	CARTONS	
	API - Montreal	1	

QUANTITY ORDERED	QUANTITY SHIPPED	DESCRIPTION MATERIAL	U/M	LIST PRICE	UNIT PRICE	EXTENDED PRICE
1		BOLT (PKG 10) AN4-14A	PA	10.17	4.58	4.58
		Item Total				4.58
		Canadian GST				0.23

TOTAL CAD 4.81

Return Policies

Warranty Information

The manufacturer warrants most products sold by API. In addition, API will gladly process warranty claims for products originally purchased through API. API offers no additional warranty beyond that of the manufacturer. Many manufacturers include warranty information in their packaging. Please feel free to contact an API Quality Service Representative concerning warranty information or to obtain the RMA (Return Materials Authorization) needed to file a warranty claim. To speak with an API Quality Service Representative dial 888-API-24X7 (888-274-2497). RMAs are valid for 30 days from date issued.

A warranty claim form and an RMA must accompany all products returned for warranty. Without this documentation API will not be able to assist you in filing your claim. Manufacturer warranty claim forms are available at WWW.APIWORLDWIDE.COM.

Please be advised that some manufacturers honor warranties by remanufacturing the part rather than issuing credit. API will return the remanufactured part to the customer.

Returns Made Easy

API accepts most returns that were purchased from our stock within 30 days of invoke. Just call an API Quality Service Representative at 888-API-24X7 (888-274-2497) to obtain the necessary RMA (Return Materials Authorization) number. By simply including the API RMA with your return, the time needed to issue credit is minimized. Nobody enjoys having to return parts. API understands this and makes it as trouble-free as possible. Remember, all returned items must be in their original packaging, must be in new, uninstalled condition and include all original documentation. A restocking fee of 15%, with a minimum of $25.00, will be assessed on all stocked items except those due to an error on API's part. RMAs are valid for 30 days from the date of issue.

No returns will be accepted 30 days from the date of invoice. Please remember that Electrical Components, Shelf-Life Limited, Non-Stock items, Drop-ship Items and Special Orders are non-returnable. Once the RMA expires the return can no longer be accepted by API and will be returned at the customer's expense.

Quick Core Credit

When ordering exchange items, the API system will automatically assign the necessary RMA (Return Materials Authorization) number to return your core. The API CSR will supply you with any additional details needed to return your core. All cores are subject to final inspection and acceptance from the vendor or manufacturer. Unless prior written authorization is obtained from API, all cores must be "like part numbers" and must be in serviceable condition. Otherwise, API will pass on any fees assessed by our manufacturer for substandard or unlike cores.

The API RMA system will print a Core Letter, which includes the customer's name and the API delivery number in which the exchange was purchased. The Core Letter must accompany all core returns. This RMA is valid for 60 days from date of invoice. Please ask your API Quality Service Representative for the return due date of your particular core. Once the RMA expires the core can no longer be accepted by API and will be returned at the customer's expense. *In the event your Return Core Letter is misplaced, contact the API Quality Service Representative to obtain a replacement.*

We appreciate your business and reaffirm our commitment to provide the most responsive customer service, as well as the highest quality compliant products, at competitive prices.

API
AEROSPACE PRODUCTS INTERNATIONAL

API
2461 46th Ave.
LACHINE QC H8T 3C9
CANADA
Phone: 514-636-5720
Fax: 514-636-6092
GST # 143526788RT

PRICING LIST

NUMBER	DATE
80830799	01/13/2011

PLEASE REMIT TO:
PO Box
Calgary AB T2P 2H6
REFER TO INVOICE NUMBER WHEN REMITTING

5101060

BILL TO AERO DESIGN LTD
2013 39 AVE NE
CALGARY AB T2E 6R7
CANADA

5101060

SHIP TO AERO DESIGN LTD
2013 39 AVE NE
CALGARY AB T2E 6R7
CANADA

Phone No: 403-250-8027

CUSTOMER PURCHASE ORDER NO.	ORDER NO. / DELIVERY NO.
11006	737638 - 80830799

SHIPPED VIA	DELIVERING PLANT	CARTONS
	API - Montreal	1

QUANTITY ORDERED	QUANTITY SHIPPED	DESCRIPTION MATERIAL	U/M	LIST PRICE	UNIT PRICE	EXTENDED PRICE
200		CHERRY RIVET (SELL ONLY IN BAG CR3523-5-2 Back Order QTY: 100	EA	0.01	2.30	230.00
		Item Total				230.00
		Canadian GST				11.50

TOTAL CAD 241.50

Return Policies

Warranty Information

The manufacturer warrants most products sold by API. In addition, API will gladly process warranty claims for products originally purchased through API. API offers no additional warranty beyond that of the manufacturer. Many manufacturers include warranty information in their packaging. Please feel free to contact an API Quality Service Representative concerning warranty information or to obtain the RMA (Return Materials Authorization) needed to file a warranty claim. To speak with an API Quality Service Representative dial 888-API-24X7 (888-274-2497). RMAs are valid for 30 days from date issued.

A warranty claim form and an RMA must accompany all products returned for warranty. Without this documentation API will not be able to assist you in filing your claim. Manufacturer warranty claim forms are available at WWW.APIWORLDWIDE.COM.

Please be advised that some manufacturers honor warranties by remanufacturing the part rather than issuing credit. API will return the remanufactured part to the customer.

Returns Made Easy

API accepts most returns that were purchased from our stock within 30 days of invoke. Just call an API Quality Service Representative at 888-API-24X7 (888-274-2497) to obtain the necessary RMA (Return Materials Authorization) number. By simply including the API RMA with your return, the time needed to issue credit is minimized. Nobody enjoys having to return parts. API understands this and makes it as trouble-free as possible. Remember, all returned items must be in their original packaging, must be in new, uninstalled condition and include all original documentation. A restocking fee of 15%, with a minimum of $25.00, will be assessed on all stocked items except those due to an error on API's part. RMAs are valid for 30 days from the date of issue.

No returns will be accepted 30 days from the date of invoice. Please remember that Electrical Components, Shelf-Life Limited, Non-Stock items, Drop-ship Items and Special Orders are non-returnable. Once the RMA expires the return can no longer be accepted by API and will be returned at the customer's expense.

Quick Core Credit

When ordering exchange items, the API system will automatically assign the necessary RMA (Return Materials Authorization) number to return your core. The API CSR will supply you with any additional details needed to return your core. All cores are subject to final inspection and acceptance from the vendor or manufacturer. Unless prior written authorization is obtained from API, all cores must be "like part numbers" and must be in serviceable condition. Otherwise, API will pass on any fees assessed by our manufacturer for substandard or unlike cores.

The API RMA system will print a Core Letter, which includes the customer's name and the API delivery number in which the exchange was purchased. The Core Letter must accompany all core returns. This RMA is valid for 60 days from date of invoice. Please ask your API Quality Service Representative for the return due date of your particular core. Once the RMA expires the core can no longer be accepted by API and will be returned at the customer's expense. *In the event your Return Core Letter is misplaced, contact the API Quality Service Representative to obtain a replacement.*

We appreciate your business and reaffirm our commitment to provide the most responsive customer service, as well as the highest quality compliant products, at competitive prices.

API
AEROSPACE PRODUCTS INTERNATIONAL

PRODUCT WANT LIST

www.apiparts.com

Circle One: Quote Order

Asia 63-45-599-5490
Calgary 888-322-8281
Montreal 800-214-7404
Memphis 800-950-0111
Chicago 866-302-9274

Company AERO DESIGN LTD.

Phone 403 250 8027 Fax 403 250 8333 Date 06 JAN 2011

P.O. # 11006 Contact JEFF CLARKE

No.	Quantity	Part Number	Description	Price	Availibility
1.	150	AN4-14A	BOLT		
2.	50	AN4-5A	BOLT		
3.	40	AN6-20A	BOLT		
4.	200	AN960-616	WASHER (NAS1149F0663P)		
5.	200	CR3523-05-02	Monel Cherry Max Rivet		
6.					
7.					
8.					
9.					
10.					

FAXED 06 JAN 2011 12:30 PM

FAX

Asia 63-45-599-5464
Calgary 888-322-8285
Montreal 800-214-8875
Memphis 800-950-1411
Chicago 630-584-8037

API Technologies
GOODYEAR #1 in Aircraft Tires
D-PRECISION AIRMOTIVE CORPORATION
CHAMPION AEROSPACE
GILL The Original Equipment Aircraft Battery

PRODUCT WANT LIST

www.apiparts.com
Asia 63-45-599-5490
Calgary 888-322-8281
Montreal 800-214-7404
Memphis 800-950-0111
Chicago 866-302-9274

Circle One: Quote Order

Company AERO DESIGN LTD.

Phone 403 250 8027 Fax 403 250 8333 Date 06 JAN 2011

P.O. # 11006 Contact JEFF CLARKE

No.	Quantity	Part Number	Description	Price	Availability
1.	150	AN4-14A	BOLT 4.58/10pk		
2.	150	AN4-5A	BOLT 5.73/25pk		
3.	40	AN6-20A	BOLT 6.32/4pk		
4.	200	AN960-616	WASHER (NAS1149F0663P) 4.04/100pk		
5.	2.00	CR3523-05-02	Monel Cherry MAX Rivet sorry no stock		
6.			↳ I can source tomorrow & get price for you		
7.					
8.			Thanks for your Order		
9.					
10.					

$230/100
1-2 wk delivery

Megan

FAX
Asia 63-45-599-5404
Calgary 888-322-8285
Montreal 800-214-6875
Memphis 800-950-1411
Chicago 630-584-8037

API Technologies
GOODYEAR
GM

01/24/2011 15:15:48

API
2461 46th Ave.
LACHINE QC H8T 3C9
CANADA

Pack List

Shipping Address
AERO DESIGN LTD
2013 39 AVE NE
CALGARY AB T2E 6R7
CANADA

Forwarding Agent's Address

Shipping Instructions
Detailed Shipping Instructions at the end of the document

Packing Instructions
Detailed Packing Instructions at the end of the document

Information

Document Number	80835673
Document Date	01/24/2011
Purchase Order No.	11006
Purchase Order Date	01/06/2011
Sales Order Number	737638
Sales Order Date	01/06/2011
Customer Number	5101060
Shipping Conditions	Will Call
Incoterms	
Cust Ship Acct	
Delivery Date	01/24/2011
Bill of Lading	
Total Volume	0.100 IN3
Carrier	UPS CANADA

Item	Material	Material Description	Quantity	Weight	Batch Num
10	CR3523-5-2	CHERRY RIVET (SELL ONLY IN BAGS OF 100)			
	Batches				
	0001717523 (PO:4500134924)		100 EA	0 LB	

Shipping and Packing Instructions

CERTIFICATE OF CONFORMANCE

I hereby certify that th eaircraft parts described hereon were acquired from a source of supply that is consistent with the conditions under which Transport Canada distributor approval number 77-98 has been granted.

Authorized Signature

AO # 77-98
API # 11

Return Policies

Warranty Information

The manufacturer warrants most products sold by API. In addition, API will gladly process warranty claims for products originally purchased through API. API offers no additional warranty beyond that of the manufacturer. Many manufacturers include warranty information in their packaging. Please feel free to contact an API Quality Service Representative concerning warranty information or to obtain the RMA (Return Materials Authorization) needed to file a warranty claim. To speak with an API Quality Service Representative dial 888-API-24X7 (888-274-2497). RMAs are valid for 30 days from date issued.

A warranty claim form and an RMA must accompany all products returned for warranty. Without this documentation API will not be able to assist you in filing your claim. Manufacturer warranty claim forms are available at WWW.APIWORLDWIDE.COM.

Please be advised that some manufacturers honor warranties by remanufacturing the part rather than issuing credit. API will return the remanufactured part to the customer.

Returns Made Easy

API accepts most returns that were purchased from our stock within 30 days of invoke. Just call an API Quality Service Representative at 888-API-24X7 (888-274-2497) to obtain the necessary RMA (Return Materials Authorization) number. By simply including the API RMA with your return, the time needed to issue credit is minimized. Nobody enjoys having to return parts. API understands this and makes it as trouble-free as possible. Remember, all returned items must be in their original packaging, must be in new, uninstalled condition and include all original documentation. A restocking fee of 15%, with a minimum of $25.00, will be assessed on all stocked items except those due to an error on API's part. RMAs are valid for 30 days from the date of issue.

No returns will be accepted 30 days from the date of invoice. Please remember that Electrical Components, Shelf-Life Limited, Non-Stock items, Drop-ship Items and Special Orders are non-returnable. Once the RMA expires the return can no longer be accepted by API and will be returned at the customer's expense.

Quick Core Credit

When ordering exchange items, the API system will automatically assign the necessary RMA (Return Materials Authorization) number to return your core. The API CSR will supply you with any additional details needed to return your core. All cores are subject to final inspection and acceptance from the vendor or manufacturer. Unless prior written authorization is obtained from API, all cores must be "like part numbers" and must be in serviceable condition. Otherwise, API will pass on any fees assessed by our manufacturer for substandard or unlike cores.

The API RMA system will print a Core Letter, which includes the customer's name and the API delivery number in which the exchange was purchased. The Core Letter must accompany all core returns. This RMA is valid for 60 days from date of invoice. Please ask your API Quality Service Representative for the return due date of your particular core. Once the RMA expires the core can no longer be accepted by API and will be returned at the customer's expense. *In the event your Return Core Letter is misplaced, contact the API Quality Service Representative to obtain a replacement.*

We appreciate your business and reaffirm our commitment to provide the most responsive customer service, as well as the highest quality compliant products, at competitive prices.

PRICING LIST

API
AEROSPACE PRODUCTS INTERNATIONAL

API
2461 46th Ave.
LACHINE QC H8T 3C9
CANADA
Phone: 514-636-5720
Fax: 514-636-6092
GST # 143526788RT

NUMBER	DATE
80835673	01/24/2011

PLEASE REMIT TO:
PO Box
Calgary AB T2P 2H6
REFER TO INVOICE NUMBER WHEN REMITTING

5101060

BILL TO
AERO DESIGN LTD
2013 39 AVE NE
CALGARY AB T2E 6R7
CANADA

5101060

SHIP TO
AERO DESIGN LTD
2013 39 AVE NE
CALGARY AB T2E 6R7
CANADA

Phone No: 403-250-8027

CUSTOMER PURCHASE ORDER NO.	ORDER NO. / DELIVERY NO.
11006	737638 - 80835673

SHIPPED VIA	DELIVERING PLANT	CARTONS
	API - Montreal	1

QUANTITY ORDERED	QUANTITY SHIPPED	DESCRIPTION MATERIAL	U/M	LIST PRICE	UNIT PRICE	EXTENDED PRICE
200		CHERRY RIVET (SELL ONLY IN BAG CR3523-5-2 Back Order QTY: 100	EA	0.01	2.30	230.00
		Item Total				230.00
		Canadian GST				11.50

TOTAL CAD 241.50

Return Policies

Warranty Information

The manufacturer warrants most products sold by API. In addition, API will gladly process warranty claims for products originally purchased through API. API offers no additional warranty beyond that of the manufacturer. Many manufacturers include warranty information in their packaging. Please feel free to contact an API Quality Service Representative concerning warranty information or to obtain the RMA (Return Materials Authorization) needed to file a warranty claim. To speak with an API Quality Service Representative dial 888-API-24X7 (888-274-2497). RMAs are valid for 30 days from date issued.

A warranty claim form and an RMA must accompany all products returned for warranty. Without this documentation API will not be able to assist you in filing your claim. Manufacturer warranty claim forms are available at WWW.APIWORLDWIDE.COM.

Please be advised that some manufacturers honor warranties by remanufacturing the part rather than issuing credit. API will return the remanufactured part to the customer.

Returns Made Easy

API accepts most returns that were purchased from our stock within 30 days of invoke. Just call an API Quality Service Representative at 888-API-24X7 (888-274-2497) to obtain the necessary RMA (Return Materials Authorization) number. By simply including the API RMA with your return, the time needed to issue credit is minimized. Nobody enjoys having to return parts. API understands this and makes it as trouble-free as possible. Remember, all returned items must be in their original packaging, must be in new, uninstalled condition and include all original documentation. A restocking fee of 15%, with a minimum of $25.00, will be assessed on all stocked items except those due to an error on API's part. RMAs are valid for 30 days from the date of issue.

No returns will be accepted 30 days from the date of invoice. Please remember that Electrical Components, Shelf-Life Limited, Non-Stock items, Drop-ship Items and Special Orders are non-returnable. Once the RMA expires the return can no longer be accepted by API and will be returned at the customer's expense.

Quick Core Credit

When ordering exchange items, the API system will automatically assign the necessary RMA (Return Materials Authorization) number to return your core. The API CSR will supply you with any additional details needed to return your core. All cores are subject to final inspection and acceptance from the vendor or manufacturer. Unless prior written authorization is obtained from API, all cores must be "like part numbers" and must be in serviceable condition. Otherwise, API will pass on any fees assessed by our manufacturer for substandard or unlike cores.

The API RMA system will print a Core Letter, which includes the customer's name and the API delivery number in which the exchange was purchased. The Core Letter must accompany all core returns. This RMA is valid for 60 days from date of invoice. Please ask your API Quality Service Representative for the return due date of your particular core. Once the RMA expires the core can no longer be accepted by API and will be returned at the customer's expense. *In the event your Return Core Letter is misplaced, contact the API Quality Service Representative to obtain a replacement.*

We appreciate your business and reaffirm our commitment to provide the most responsive customer service, as well as the highest quality compliant products, at competitive prices.

AERO Design Ltd.
2013 - 39th Avenue N.E.
Calgary, Alberta, T2E 6R7
Phone: (403) 250-8027
Fax: (403) 250-8333

Purchase Order

P.O. Number	**11005**
Date	06-Jan-11

Vendor:

Name: Top Gun Coatings
Address: #102, 4715 - 13 Street N.E.
Calgary, AB T2E 6M3
Phone: 250-5393
Fax: 250-5392
Attention: 0
Currency: CAD

Ship To:

Name: AERO Design Ltd.
Address: 2013 - 39th Avenue N.E.
Calgary, Alberta, T2E 6R7
Phone: (403) 250-8027
Fax: (403) 250-8333
Attention:

ITEM	DESCRIPTION	QTY	RATE	AMOUNT
	Powder Coat: Sky White 1x AS350 Long Step	1	60.00	60.00
		Subtotal		60.00
	Sales Tax	GST	5.00%	3.00
		Total	**CAD**	**$63.00**

PACKING SLIP

TOP GUN COATINGS INC.

#101, 4715 - 13th STREET N.E., CALGARY, ALBERTA T2E 6M3
PH: (403) 250-5393 FAX: (403) 250-5392
www.topguncoatings.com

TO: AERO DESIGN 2013 - 39 AVENUE N.E. CALGARY, AB T2E 6R7 PH: (403) 250-8027 FAX: (403) 250-8333	DATE: JANUARY 06, 2011 INVOICE NO: 41379 PO NO: 11005 ATTN: JEFF CLARKE

SHIPPED VIA	TERMS
PICK UP	30 DAYS

QUANTITY	DESCRIPTION	UNIT PRICE	AMOUNT
	POWDER: SKY WHITE		
1	STEP (MEDIUM)	$60.00	$60.00
	TOTAL: 1 PIECE		
		SUB-TOTAL	$60.00
		GST (5%)	$3.00
		SHIPPING & HANDLING	
		TOTAL DUE	$63.00

GST #122043409

Authorized Signature

THANK-YOU FOR YOUR ORDER

AERO Design Ltd.
2013 - 39th Avenue N.E.
Calgary, Alberta, T2E 6R7
Phone: (403) 250-8027
Fax: (403) 250-8333

Purchase Order

P.O. Number	**11004**
Date	06-Jan-11

Vendor:	
Name:	Shippers Supply Inc.
Address:	8-3401 19 Street NE Calgary, AB, T2E 6S8
Phone:	403-291-0450
Fax:	
Attention:	
Currency:	CAD

Ship To:	
Name:	AERO Design Ltd.
Address:	2013 - 39th Avenue N.E. Calgary, Alberta, T2E 6R7
Phone:	(403) 250-8027
Fax:	(403) 250-8333
Attention:	Jeff Clarke

ITEM	DESCRIPTION	QTY	RATE	AMOUNT
1	Custom Box - 5" x 5" x 5"	25		0.00
2	Custom Box - 30" x 13" x 13"	15		0.00
		Subtotal		0.00
	Sales Tax	GST	5.00%	0.00
		Total	**CAD**	**$0.00**

PACKING SLIP

SHIPPERS SUPPLY
shipperssupply.com

SHIPPERS SUPPLY INC.
8-3401 19 ST NE
CALGARY AB
T2E 6S8 (403) 291-0450

S0545832
PAGE 1

SHIP TO ADDRESS

AERO DESIGN LTD
2013 39 AVE NE
CALGARY AB
T2E 6R7

BILL TO ADDRESS

AERO DESIGN LTD
2013 39 AVE NE
CALGARY AB
T2E 6R7

P.O. NUMBER: 11004
DATE SHIPPED: 01/18/11
SHIP INSTRUCTIONS:

TRUCKER: PICK UP

QUANTITY	UNIT WEIGHT	PRODUCT NUMBER	SHIPPING NAME	TOTAL WEIGHT
25.00	.0	NS15000	CUSTOM MFG. BOXES AS DESCRIBED BELOW: RBK-017 SIZE: 5" X 5" X 5" QTY: 25 PRICE: $2.75	.0
15.00	.0	NS15000	CUSTOM MFG. BOXES AS DESCRIBED BELOW: RBK-491C SIZE: 30" X 13" X 13" QTY: 15 PRICE: $13.14	.0

COLLECT NONE .0

AERO Design Ltd.
2013 - 39th Avenue N.E.
Calgary, Alberta, T2E 6R7
Phone: (403) 250-8027
Fax: (403) 250-8333

Purchase Order

P.O. Number	**11003**
Date	06-Jan-11

Vendor:	
Name:	Instabox Alberta Inc.
Address:	1139 - 40th Avenue N.E. Calgary, Alberta T2E 6M9
Phone:	0
Fax:	0
Attention:	0
Currency:	CAD

Ship To:	
Name:	AERO Design Ltd.
Address:	2013 - 39th Avenue N.E. Calgary, Alberta, T2E 6R7
Phone:	(403) 250-8027
Fax:	(403) 250-8333
Attention:	

ITEM	DESCRIPTION	QTY	RATE	AMOUNT
	Boxes 77x26x18 Bottom DW 78x27x6 Lid DW	30	34.83	1,044.90
		Subtotal		1,044.90
	Sales Tax	GST	5.00%	52.25
		Total	**CAD**	**$1,097.15**

1/10/11 *** BILL OF LADING *** Page 1
10:09:38

INSTABOX ALBERTA INC. - CLGY.
1139 40 AVE. N.E.
CALGARY,ALBERTA T2E 6M9

Order: 0176464 Ord Date: 1/06/11 Cust P/O#: 11003 Slspn: SC

Sold To: AER005 Contact: JEFF CLERKE
AERO DESIGN LTD

2013 39TH AVE NE
CALGARY, AB T2E 6R7
Phone: (403) 250-8027
Fax : (403) 250-8333

Ship To:
AERO DESIGN LTD

2013 39TH AVE NE
CALGARY, AB T2E 6R7
Phone: (403) 250-8027
Fax : (403) 250-8333

Req Date: 1/12/11 Ship Loc: 11 Via: OUR DELIVERY Frt: Prepaid

Item Code	Docket	Description	U/M	Qty Ord	Qty Shp	Qty B/O
2143		77 X 26 X 18 TRAY BOTTOM Docket: 0076705	EA	30.00	31	
2143		78 X 27 X 6 TRAY LID D/W Docket: 0076706	EA	30.00	31	

Received above In Good Condition, Print Name:_____

Signature:_____

Date: 1/12/11 Delivered by: _____ # Of Pieces\Bundles_____

Picked By: _____ # Of Pallets 1

INVOICE:_____ 2 - Dockets

Jeff Clarke

From: Sylvie Calixte [sylvie@instabox.com]
Sent: January 6, 2011 10:22 AM
To: Jeff Clarke
Subject: Re: Quote Please

Hi Jeff

He had a price increase last year . For 30 boxes with the lead included is ($34.83ea). If you have any questions please call or email.

--

PO 11 003

Regards,

Sylvie Calixte

Phone: (403) 250-9217 ext 2350
Direct Fax: (403) 250-8075
Direct Phone: (403) 219-2350
Email <mailto:sylvie@instabox.com>sylvie@instabox.com

"Celebrating our 35th year of manufacturing in Alberta (1975-2010)"

CALGARY:
Tel (403) 250-9217
Fax (403) 250-8075
Toll Free (800) 482-6173
EDMONTON:
Tel (780) 452-9522
Fax (780) 452-3876
Toll Free (800) 661-9949
VANCOUVER:
Tel (604) 269-4648 (BOXIN4U)
Fax (604) 269-4649
Toll Free (888) 543-1113

This message is intended for the use of the individual or entity to which it is addressed and may contain information that is privileged, confidential and exempt from disclosure. If you are not the intended recipient or the employee responsible for delivering the message to the intended recipient, you are notified that any dissemination, distribution or copying of this communication is strictly prohibited. If you have received this communication in error, please notify us immediately by telephone (collect if required), and return the original message to us by mail or, alternatively destroy this message. Thank-you.

Jeff Clarke

From: Jeff Clarke [jeff@aerodesign.ca]

Sent: January 5, 2011 10:17 AM

To: 'Eva Logan'; 'Sylvie Calixte'

Subject: Quote Please

Eva/Sylvie,

Please provide a quote for 30 boxes – 77" x 26" x 18" tray with 4" lid, 275#dw. (Same as we have ordered before)

Thank you.

Jeff Clarke, CET

AERO Design Ltd.
2013 39th Avneue NE
Calgary, Alberta, Canada
T2E 6R7

Phone: 403.250.8027
Fax: 403.250.8333

AERO Design Ltd.
2013 - 39th Avenue N.E.
Calgary, Alberta, T2E 6R7
Phone: (403) 250-8027
Fax: (403) 250-8333

Purchase Order

P.O. Number	**11002**
Date	06-Jan-11

Vendor:	
Name:	EB Peerless Ltd.
Address:	4506-10 Street NE Calgary, AB, T2E 6K3
Phone:	403-296-0030
Fax:	403-296-0034
Attention:	
Currency:	CAD

Ship To:	
Name:	AERO Design Ltd.
Address:	2013 - 39th Avenue N.E. Calgary, Alberta, T2E 6R7
Phone:	(403) 250-8027
Fax:	(403) 250-8333
Attention:	Jeff Clarke

ITEM	DESCRIPTION	QTY	RATE	AMOUNT
1	SW-1-BLACK 3M Safety Walk Tape, 1" x 60', Black	4	36.25	145.00
		Subtotal		145.00
	Sales Tax	GST	5.00%	7.25
		Total	**CAD**	**$152.25**

PACKING LIST

ORDER DATE	SHIP DATE	CUSTOMER PO
01/06/11	01/17/11	11002

VANCOUVER OFFICE
Unit 130 - 6651 Elmbridge Way
Richmond, B.C. V7C 5C2
Phone: 604-279-9907
Fax: 604-279 -9914
Toll Free: 1 -800-663-3271

CALGARY OFFICE
4506 - 10th Street N.E.
Calgary, Alberta T2E 6K3
Phone: (403) 296 - 0030
Fax: (403) 296-0034
Toll Free: 1-800-663-3916

TORONTO OFFICE
Unit 12 & 13 - 2430 Lucknow Dr
Mississauga, Ontario L5S 1V3
Phone: (905) 362-1151
Fax: (905) 362-1155
Toll Free: 1-866-327-7111

MONTREAL OFFICE
150 Aime-Vincent
Vaudreuil-Dorion, Quebec J7V 5V5
Phone: (514) 893-3962
Fax: (514) 620-0213

SOLD TO:
AERO DESIGN LTD.
COD ACCOUNT

SHIP TO:
AERO DESIGN LTD.
2013-39TH AVENUE NE
403-250-8027
CALGARY, ALBERTA
T2E 6R7

QMI REGISTERED
VANCOUVER
ISO 9001 - 2000

CUSTOMER	OUR REF.#	COUNT	ORDERED BY	REV	TERMS
1AERODE	C09770	0	JEFF	N	DUE ON RECEIPT

CUSTOMER GST #	P.S.T. LIC #	SHIPPED VIA
		CALL FOR PICKUP WHEN READY

SHIPPING CHARGES: ☐ PREPAID ☐ PPD & CHARGED ☐ COLLECT

	ORDER QTY	UOM	SHIP	B/O	STOCK CODE	DESCRIPTION	UNIT PRICE	PER	EXT
1	4	EA	4	0	SW-1-BLACK	3M GP SAFETY-WALK 1"X60FT ROLL F-610-BLK-1X60			

THANK YOU FOR PAYING BY CHEQUE #
THANK YOU FOR YOUR ORDER-01/06/11 JANICE/AS

ORDER	RETURNS
☐ COMPLETE ☐ PARTIAL	Not all goods are returnable. No returned goods without prior authorization and acceptance are subject to inspection. Restocking charges may apply.

Number of Packages & Signature

Pulled _____ Checked _____ Packed _____

24 HOUR A.O.G. SERVICE VANCOUVER
Derek Hume Cell: (604) 999-3813
Mike Vick Cell: (604) 999-0273

24 HOUR A.O.G. SERVICE CALGARY
Matt Thompson Cell: (403) 880-1956
Ken Hume Cell: (403) 804-1154
Office Cell: (403) 519-6068

24 HOUR A.O.G. SERVICE TORONTO
Eamonn Morgan..Cell (416) 543-7686

24 HOUR A.O.G. SERVICE MONTREAL
Robert Maucieri..Cell (514) 893-3962

AERO Design Ltd.
2013 - 39th Avenue N.E.
Calgary, Alberta, T2E 6R7
Phone: (403) 250-8027
Fax: (403) 250-8333

Purchase Order

P.O. Number	**11001**
Date	05-Jan-11

Vendor:	
Name:	Accurate Screen
Address:	#147 - 10905 - 48 Street SE Calgary, AB, T2C 1G8
Phone:	403-723-0323
Fax:	403-236-0703
Attention:	Ed D.
Currency:	CAD

Ship To:	
Name:	AERO Design Ltd.
Address:	2013 - 39th Avenue N.E. Calgary, Alberta, T2E 6R7
Phone:	(403) 250-8027
Fax:	(403) 250-8333
Attention:	Jeff Clarke

ITEM	DESCRIPTION	QTY	RATE	AMOUNT
1	3/4-16F Stainless Steel Epanded Sheet	5	100.80	504.00
		Subtotal		504.00
	Sales Tax	GST	5.00%	25.20
		Total	**CAD**	**$529.20**

ACCURATE screen ltd.

Products with holes, backed with **solid** service...

#147 - 10905 - 48 St SE
Calgary AB Canada T2C 1G8
Phone: (403) 723-0323
Fax: (403) 236-0703
Toll Free: 1-877-857-0323

INVOICE

Invoice No: 0000113944
Date: 05-Jan-2011
Order No: 0000612981

BILL TO:
Walk In Cash Sale
Calgary

SHIP TO:
Aero Design LTD.
250-8027
Calgary

Ship Via: ..Customer P/U

Tracking #:

Order Date:	05-Jan-11
PO No:	11001
Salesperson:	Ed D
Terms:	C.O.D.

PART NO.	QTY	UOM	DESCRIPTION	LOC	UNIT PRICE	EXTENDED PRICE
EFT1-750-16	5.00	SHEET	Expanded Flat 304ss .75-16F 4'x8'	CE-6	100.80	504.00
			Pd Cheque.			
			Thanks, Ed			

1)Accurate Screen and Grating is the operating name of Accurate Screen LTD
2) Check out our new website @ ACCURATESCREEN.CA
3) For emailed invoices, please contact murray@accuratescreen.ca
4) With your support in 2010, Accurate Screen made donations to various Salvation Army locations and other charities. $ 20,000.00 throughout Western Canada - thank you

GST Number 86618-5010 RT0001

CANADIAN DOLLARS	
NET AMOUNT	504.00
FREIGHT	
G.S.T.	25.20
TOTAL DUE	$529.20

PL 59451